CROUZET MOTORS

## 5 Nm 2.7 and 3.5 Watts 3.5 Watts Part number 80527010



- Mechanical strength : 5 Nm
- Constant speed, dependent on supply frequency
- Direction of rotation controlled by dephasing capacitor
- Permanent magnet rotor
- UL, CSA, VDE approved ; comply with IEC standards

### Part numbers

| | Type | Type | Voltage / Frequency | Base speed of motor (rpm) | Output speed (rpm) | Ratios |
|---|---|---|---|---|---|---|
| 80 527 010 | 3.5 Watts | 80 527 0 | 230-240 V / 50 Hz | 250 | 20 | 12,5 |

### Specifications

| | |
|---|---|
| Motor | 82 520 0 |
| Gearbox | 81 037 0 |
| Maximum permitted continuous rated gearbox output torque for 1 million revolutions of gearbox output shaft (Nm) | 5 |
| Axial load static (daN) | 2 |
| Radial load static (daN) | 3 |
| Absorbed power (W) | 3,5 |
| Motors output (W) | 0,98 |
| Maximum temperature rise (°C) | 50 |
| Ambient temperature (°C) | -10 →+70 |
| Weight (g) | 530 |
| Wires length mm (approximately) | 250 |
| Protection rating | IP40 |

### Accessories

| Voltages/Frequencies | µF | V AC | Code |
|---|---|---|---|
| Capacitors for motor 82 520 0 | | | |
| 230-240 V - 50 Hz | 0,1 ± 10 % | 500 | 26 231 941 |
| 115 V - 60 Hz | 0,33 ± 10 % | 400 | 26 231 801 |
| 24 V - 50 Hz | 8,2 ± 10 % | 63 | 26 231 711 |

### Dimensions (mm)

**80 517 0 - 80 527 0**

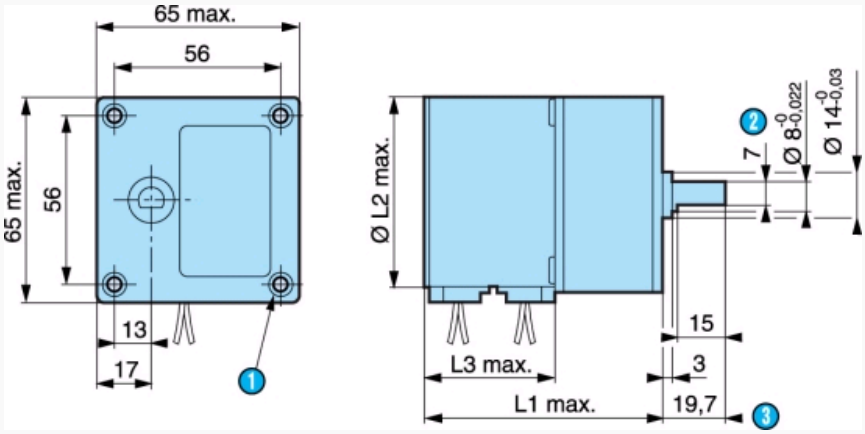


| Nº | Legend |
|---|---|
| 1 | 4 holes M4 depth 12 |
| 2 | 7 across flat |

*Unless otherwise specified, the characteristics given are applicable to all or part of the product range selected*

| | |
|---|---|
| 3 | (pushed-in shaft ) |
| | 80 517 0 L1 = 55.3 mm Ø L2 = 35.8 mm L3 = 21.7 mm |
| | 80 527 0 L1 = 59.2 mm Ø L2 = 51.3 mm L3 = 25.6 mm |

## Dimensions (mm)

**Shaft 79 206 478**

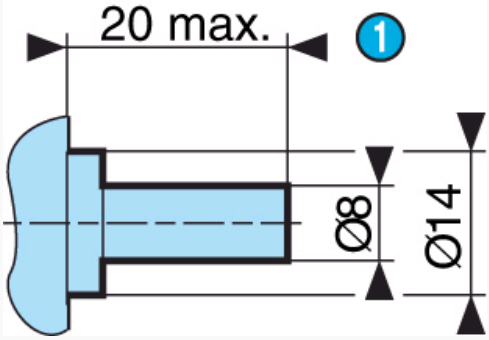


| Nº | Legend |
|---|---|
| 1 | (pushed-in shaft ) |

## Curves

**Torque/speed curves 80 527 0**

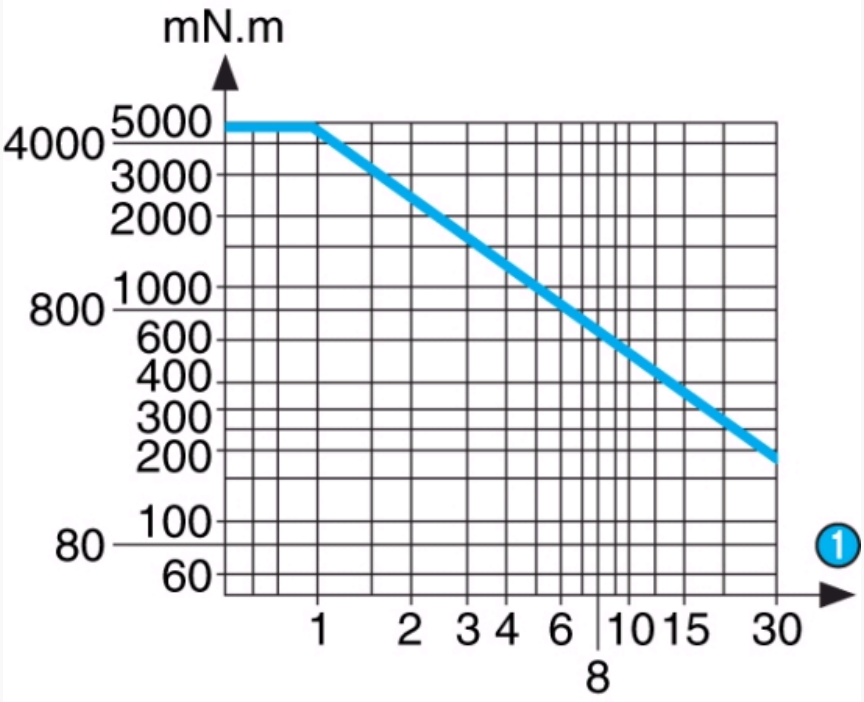


| Nº | Legend |
|---|---|
| 1 | RPM |

## Connections

**In parallel**
**Motors 82 510 0 - 82 520 0**

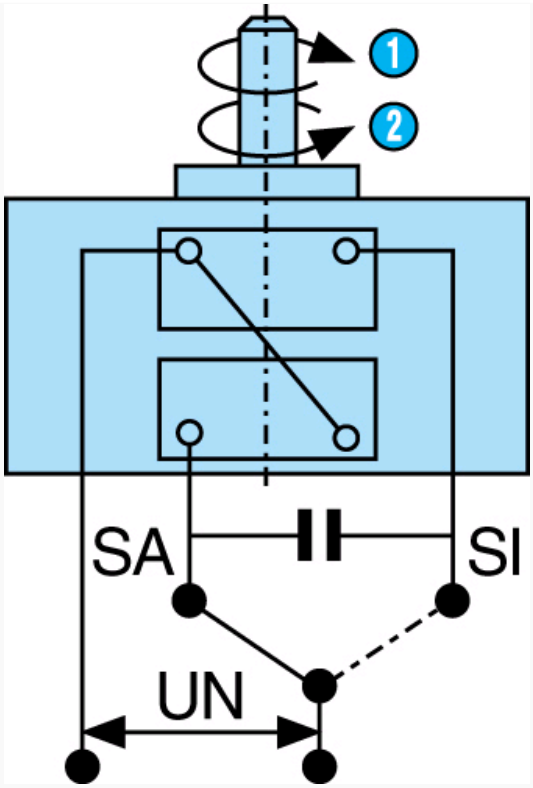


| Nº | Legend |
|---|---|
| 1 | SA : clockwise |
| 2 | SI : anti-clockwise |

## Product adaptations

- Different voltages available
- Special cable lengths
- Special connectors
- Special output shafts
- Special gearbox ratios
- Special gear wheel material
- Special output bearings