CROUZET MOTORS

2 Nm RE2 10 and 17 Watts 17 W Part number made to order



- Torque rating of gearboxes : 2 Nm, metal gears
- Motors : nominal power 9 W and 15 W
- Speed range : 1 to 40 rpm
- Cyclic operation only
- Replaceable brushes

Part numbers

	Type	Type	Voltage	Output speed (rpm)	Ratios (i)
80804008	17 W	808040	12 V	4	650

Specifications

General characteristics

Motor	828000
Gearbox	810440
Maximum permitted torque from gearmotor under continuous conditions for 1 million turns (Nm)	2
Axial load dynamic (daN)	2
Radial load dynamic (daN)	2
Max. output power (W)	16,3
Nominal output (W)	15,7
Gearbox case temperature rise (°C)	44
Weight (g)	670

Made to order products, available on request

Motors :

. Special interference suppression
- Other supply voltages
- Motor with 1 ball bearing
- Shaft lengths at front and/or rear
- 1 or 5 pulses/revolution magnetic encoder
- Other fixing flanges on front

Gearboxes :

- Special greasing
- Other reduction ratios

Dimensions (mm)

808040 standard

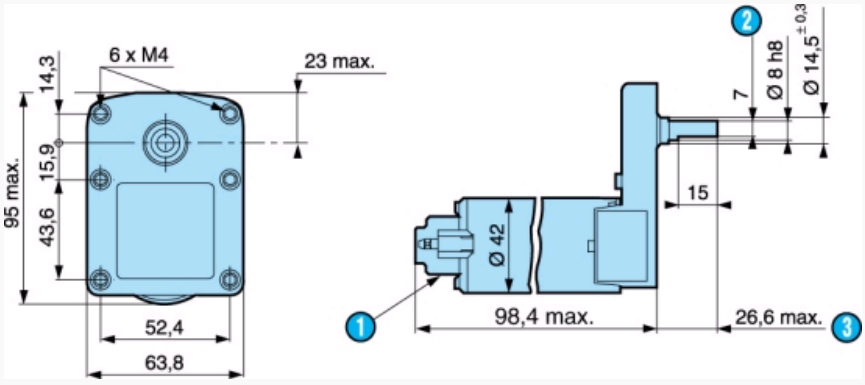

Nº	Legend
1	2 tags IEC 760, series 4.8 x 0.5
2	7 across flats
3	Shaft pushed-in

Unless otherwise specified, the characteristics given are applicable to all or part of the product range selected

Dimensions (mm)

808040 encoder

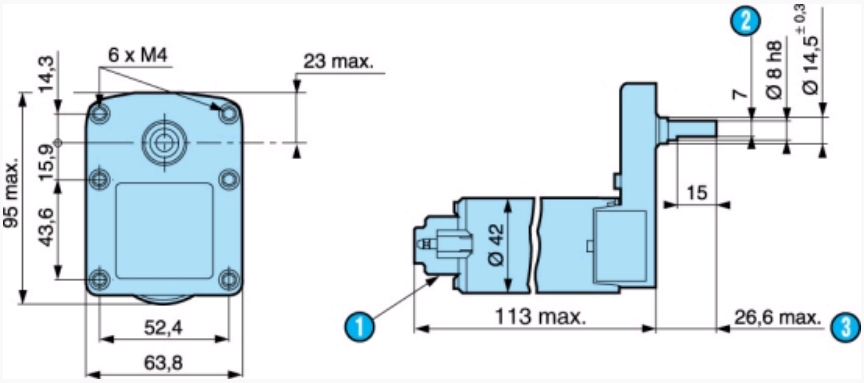

Nº	Legend
1	2 tags IEC 760, series 4.8 x 0.5
2	7 across flats
3	Shaft pushed-in

Dimensions (mm)

Shaft 79261300

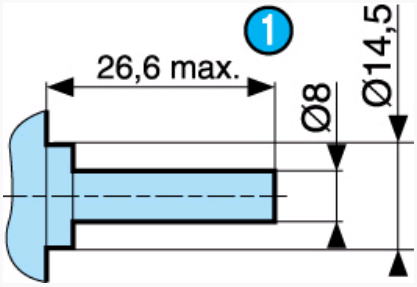

Nº	Legend
1	Shaft pushed-in

Dimensions (mm)

Shaft 79261309

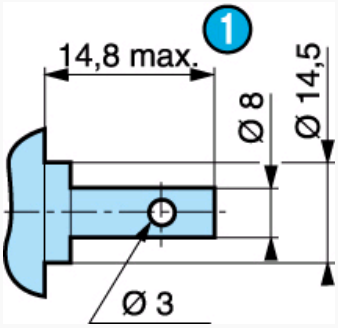

Nº	Legend
1	Shaft pushed-in

Dimensions (mm)

Shaft 79261314

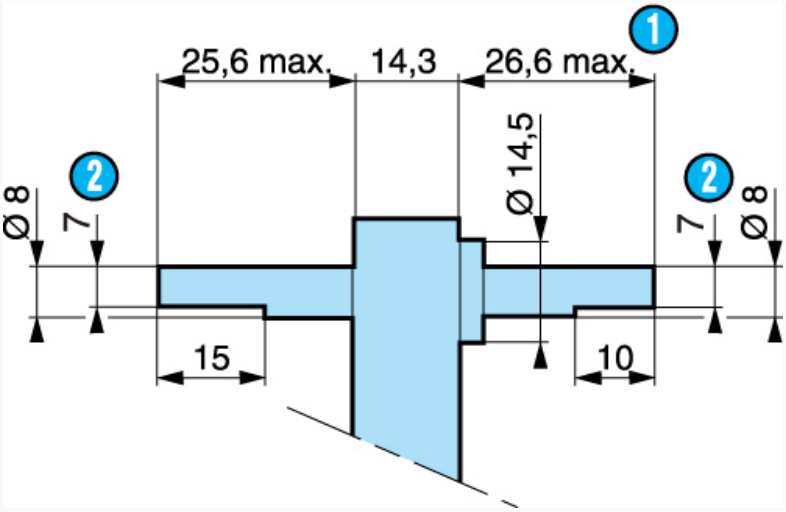

Nº	Legend
1	Shaft pushed-in
2	7 across flats

Curves

Curve : torque/nominal speed 808040

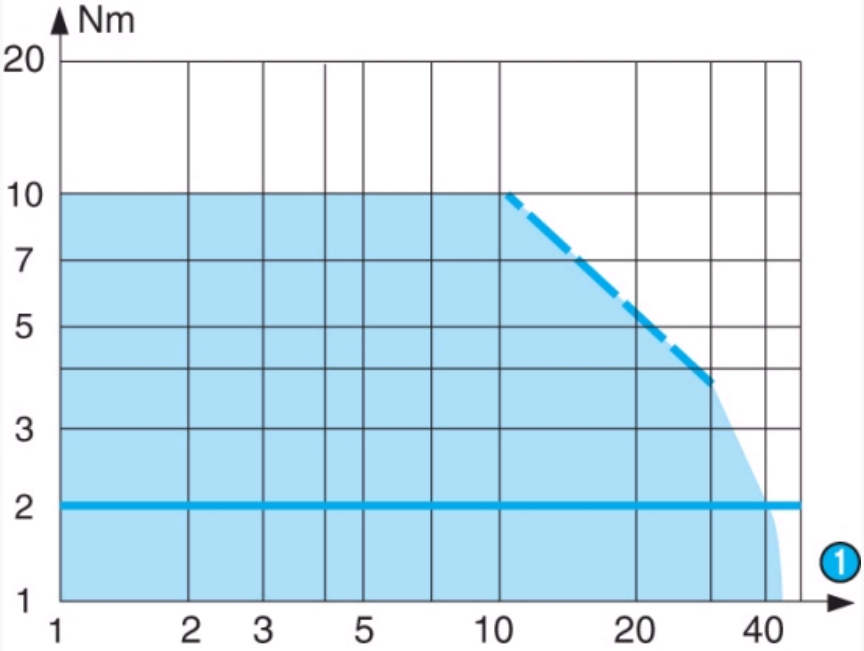

Nº	Legend
1	rpm

Product adaptations

- Special supply voltage
- Optical or Hall effect encoder
- Special connections
- Special shaft
- Special reduction ratio
- Special materials for gears
- Special ball bearings
- Special adaptor plate