CROUZET MOTORS

5 Nm RC65 10 and 17 Watts 10 W Part number 80 817 005



- Torque rating of gearboxes : 5 Nm, metal gears
- Motors : nominal power 9 W to 15 W
- Speed range : 1.04 to 208 rpm
- Replaceable brushes

Part numbers

	Type	Type	Voltage	Output speed (rpm)	Ratios (i)
80817005	10 W	808170	24 V	5,20	500

Specifications

General characteristics

Motor	828100
Gearbox	810370
Maximum permitted torque from gearmotor under continuous conditions for 1 million turns (Nm)	5
Axial load dynamic (daN)	2
Radial load dynamic (daN)	3
Max. output power (W)	9,5
Nominal output (W)	8,7
Gearbox case temperature rise (°C)	46
Weight (g)	710

Made to order products, available on request

Motors :

- Other supply voltages
- Motor with 1 ball bearing at front (essential for vertical motor)
- Shaft lengths at front and/or rear
- Special interference suppression
- 5 pulses/revolution magnetic encoder
- Other fixing flanges on front

Gearboxes :

- Drawn cup needle bearing for 81 032 6
- Special cover for 81 032 6
- Special greasing
- Special shaft
- Other reduction ratios

Dimensions (mm)

808170 standard

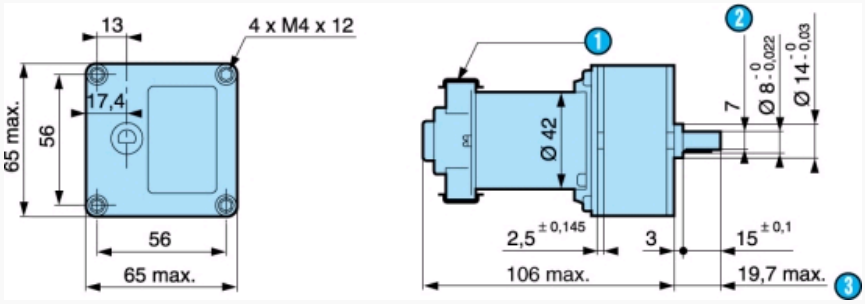

Nº	Legend
1	2 tags IEC 760, series 4.8 x 0.5
2	7 across flats
3	Shaft pushed-in

Dimensions (mm)

Unless otherwise specified, the characteristics given are applicable to all or part of the product range selected

808170 encoder

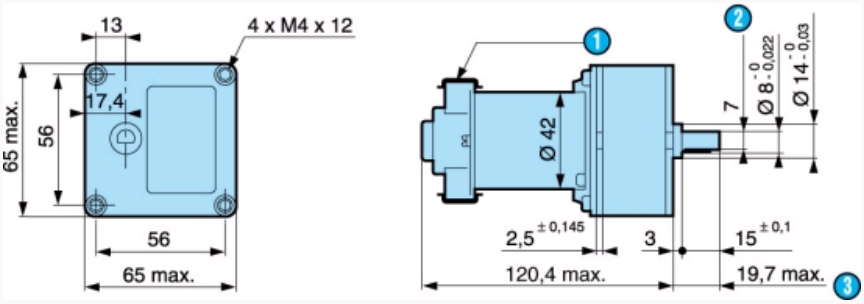

Nº	Legend
1	2 tags IEC 760, series 4.8 x 0.5
2	7 across flats
3	Shaft pushed-in

Dimensions (mm)

Gearbox shaft 79206478

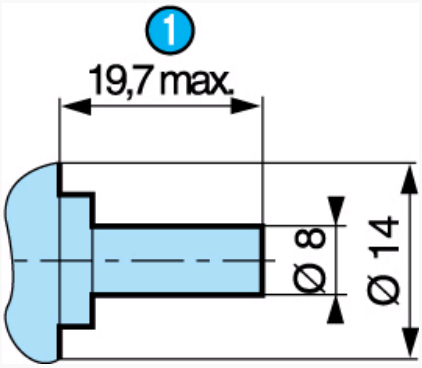

Nº	Legend
1	Shaft pushed-in

Curves

Curve : torque/nominal speed 808170

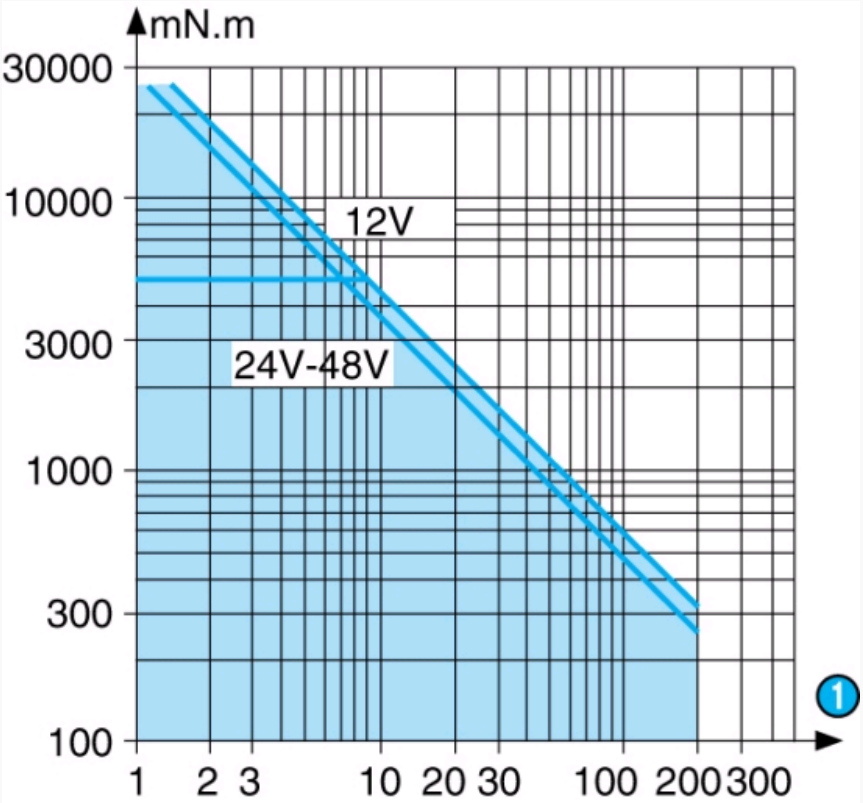

N°	Legend
1	rpm

Product adaptations

- Special supply voltage
- Optical or Hall effect encoder
- Special connections
- Special shaft
- Special reduction ratio (40 ratios available from 4 to 3750)
- Special materials for gears
- Special ball bearings
- Special adaptor plate
- With 828105 or 828005 motor
- With 82830 - 30 W motor