Single direction synchronous geared motors

➜ 2 Nm 3 and 3.5 Watts

- **Mechanical strength : 2 Nm**
- **Constant speed, dependent on supply frequency**
- **Wide range of speeds available**
- **Direction of rotation controlled by long-life mechanical anti-return**
- **Permanent magnet rotor**
- **Silent operation**
- **UL, CSA, VDE approved, comply with IEC standards**





Specifications

		3 Watts				3.5 Watts			
Type		82 304 0				82 305 5			
Voltage / Frequency		115 V - 60 Hz				115 V - 60 Hz			
Output speed	**Ratios**	**Counter-Clockwise**		**Clockwise**		**Counter-Clockwise**		**Clockwise**	
38.4 rpm	18.75	**82 304 0A238.4MX**	●	**82 304 0A138.4MX**	●	**82 305 5A238.4MX**	●	**82 305 5A138.4MX**	●
28.8 rpm	25	**82 304 0A228.8MX**	●	**82 304 0A128.8MX**	●	**82 305 5A228.8MX**	●	**82 305 5A128.8MX**	●
18 rpm	40	**82 304 0A20018MX**	●	**82 304 0A10018MX**	●	**82 305 5A20018MX**	●	**82 305 5A10018MX**	●
14.4 rpm	50	**82 304 0A214.4MX**	●	**82 304 0A114.4MX**	●	**82 305 5A214.4MX**	●	**82 305 5A114.4MX**	●
12 rpm	60	**82 304 0A20012MX**	●	**82 304 0A10012MX**	●	**82 305 5A20012MX**	●	**82 305 5A10012MX**	●
9 rpm	80	**82 304 0A20009MX**	●	**82 304 0A10009MX**	●	**82 305 5A20009MX**	●	**82 305 5A10009MX**	●
7.2 rpm	100	**82 304 0A207.2MX**	●	**82 304 0A107.2MX**	●	**82 305 5A207.2MX**	●	**82 305 5A107.2MX**	●
6 rpm	120	**82 304 0A20006MX**	●	**82 304 0A10006MX**	●	**82 305 5A20006MX**	●	**82 305 5A10006MX**	●
4.5 rpm	160	**82 304 0A204.5MX**	●	**82 304 0A104.5MX**	●	**82 305 5A204.5MX**	●	**82 305 5A104.5MX**	●
2.88 rpm	250	**82 304 0A22.88MX**	●	**82 304 0A12.88MX**	●	**82 305 5A22.88MX**	●	**82 305 5A12.88MX**	●
2.4 rpm	300	**82 304 0A202.4MX**	●	**82 304 0A102.4MX**	●	**82 305 5A202.4MX**	●	**82 305 5A102.4MX**	●
1.33 rpm	540	**82 304 0A21.33MX**	●	**82 304 0A11.33MX**	●	**82 305 5A21.33MX**	●	**82 305 5A11.33MX**	●
1.2 rpm	600	**82 304 0A201.2MX**	●	**82 304 0A101.2MX**	●	**82 305 5A201.2MX**	●	**82 305 5A101.2MX**	●
0.86 rpm	800	**82 304 0A20.86MX**	●	**82 304 0A10.86MX**	●	**82 305 5A20.86MX**	●	**82 305 5A10.86MX**	●
0.67 rpm	1,080	**82 304 0A20.67MX**	●	**82 304 0A10.67MX**	●	**82 305 5A20.67MX**	●	**82 305 5A10.67MX**	●
0.48 rpm	1,500	**82 304 0A20.48MX**	●	**82 304 0A10.48MX**	●	**82 305 5A20.48MX**	●	**82 305 5A10.48MX**	●
0.24 rpm	3,000	**82 304 0A20.24MX**	●	**82 304 0A10.24MX**	●	**82 305 5A20.24MX**	●	**82 305 5A10.24MX**	●
0.15 rpm	4,800	**82 304 0A20.15MX**	●	**82 304 0A10.15MX**	●	**82 305 5A20.15MX**	●	**82 305 5A10.15MX**	●
0.12 rpm	6,000	**82 304 0A20.12MX**	●	**82 304 0A10.12MX**	●	**82 305 5A20.12MX**	●	**82 305 5A10.12MX**	●
8/5 rph	27,000	**82 304 0A201.6HX**	●	**82 304 0A101.6HX**	●	**82 305 5A201.6HX**	●	**82 305 5A101.6HX**	●
4/5 rph	54,000	**82 304 0A200.8HX**	●	**82 304 0A100.8HX**	●	**82 305 5A200.8HX**	●	**82 305 5A100.8HX**	●
6/25 rph	180,000	**82 304 0A20.24HX**	●	**82 304 0A10.24HX**	●	**82 305 5A20.24HX**	●	**82 305 5A10.24HX**	●
General characteristics									
Motor		82 340 0				82 330 5			
Gearbox		81 033 0				81 033 0			
Maximum permitted torque from gearmotor under continuous conditions for 1 millions turns of the gearmotor (N.m)		2				2			
Radial load (static) daN		1				1			
Axial load (static) daN		10				10			
Absorbed power (W)		3				3.5			
Motor output (W)		0.16				0.42			
Maximum temperature rise (°C)		55				55			
Ambient temperature (°C)		-50 ➞ +60				-50 ➞ +60			
Weight (g)		250				300			
Wires length mm (approximately)		250				250			
Protection rating		IP40				IP40			

Products adaptations, available on request

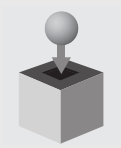

- **Special supply voltages**
- **Special lead lengths**
- **Special connectors**
- **Special output shafts**
- **Special gearbox ratios**
- **Special gear material**
- **Special output bearings**
- **Special mounting plate**

Products and specifications subject to change without notice.

Curves

Graph of torque versus speed 82 304 0

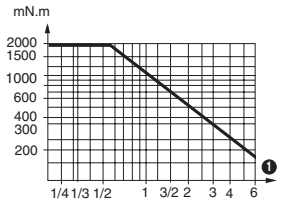

❶ RPM

Graph of torque versus speed 82 305 0

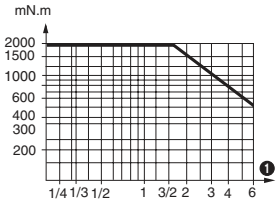

❶ RPM

Dimensions

82 304 0 - 82 305 5

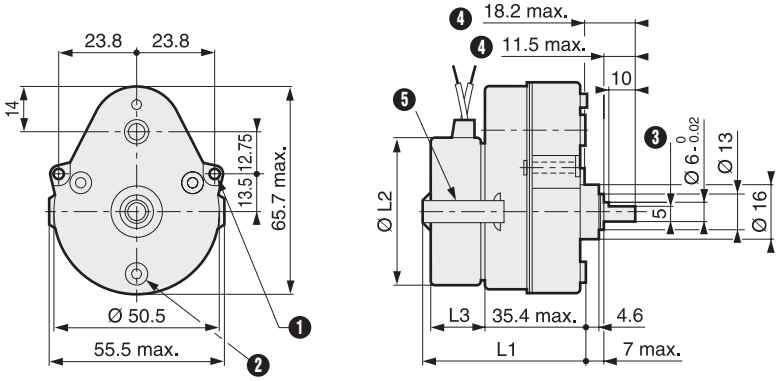

❶ 2 fixing holes Ø 3.2
❷ 3 mounting bosses Ø 7.2 at 120° on radius = 19.5 with 3 holes M3 depth 4
❸ across flat
❹ (pushed-in shaft ←)
❺ fixing clip

82 304 0 L1 = 54.8 mm max. / Ø L2 = 47.2 mm max. / L3 = 16.9 mm max.
82 305 5 L1 = 59.85 mm max. / Ø L2 = 47.2 mm max. / L3 = 22.9 mm max.

Options

Shaft 79 202 573

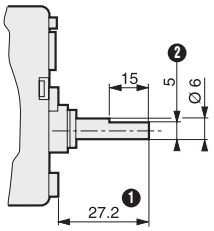

❶ 5 across flat
❷ (pushed-in shaft ←)

Other information

The speed of a motor powered by a 60 Hz supply is 20 % higher than that of a motor powered by a 50 Hz supply.