CROUZET MOTORS

0.5 Nm 3.5 Watts 3.5 Watts Part number made to order



- Mechanical strength : 0.5 Nm
- Constant speed, dependent on supply frequency
- Wide range of speeds available
- Direction of rotation controlled by dephasing capacitor
- Permanent magnet rotor
- UL, CSA approved, comply with IEC standards

Part numbers

	Type	Type	Base speed of motor (rpm)	Output speed	Ratios (i)	Voltage / Frequency
82 524 021	3.5 Watts	82 524 0	250	0,21 rpm	1200	230-240 V - 50 Hz

Specifications

Motor	82 520 0
Gearbox	81 021 0
Maximum permitted continuous rated gearbox output torque for 1 million revolutions of gearbox output shaft (Nm)	0.5
Axial load static (daN)	1
Radial load static (daN)	8
Absorbed power (W)	3,5
Motor output (W)	0,98
Maximum temperature rise (°C)	50
Ambient temperature (°C)	-5 →+70
Weight (g)	140
Wires length mm (approximately)	250
Protection rating	IP40

Accessories

Voltages/Frequencies	µF	V AC	Code
Capacitors for motor 82 520 0			
230-240 V - 50 Hz	0,1 ± 10 %	500	26 231 941
115 V 60 Hz	0,33 ± 10 %	400	26 231 801
24 V - 50 Hz	8,2 ± 10 %	63	26 231 711

Principles

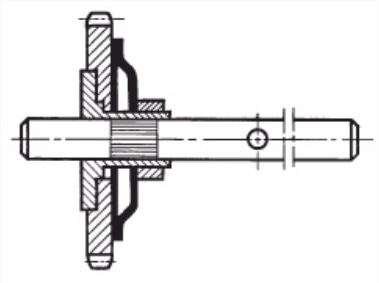

This device is situated inside the gearbox and is particularly recommended when gearbox protection is required in the event of accidental overloading.
In this system, the final gear is connected to the gearbox output shaft by means of a friction assembly.
In some cases, this device can be used for time adjustment or zero reset on timers.
The standard torque setting is from :
- 1.8 to 2.5 cm/kg for gearbox 810210
- 7 to 10 cm/kg for gearbox 810330

Principles

Unless otherwise specified, the characteristics given are applicable to all or part of the product range selected

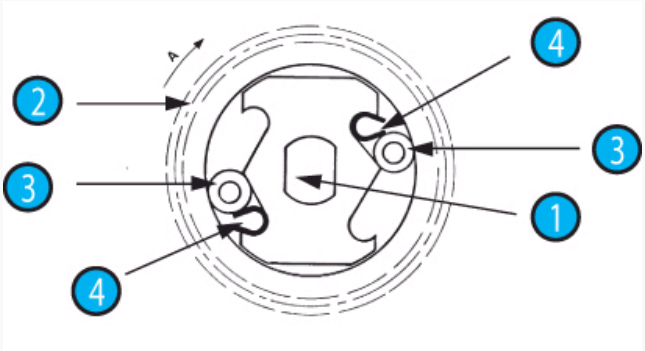

This device, situated inside the gearbox, enables the output shaft to be rotated by
an external force (manual or mechanical) independently of the final wheel of the gearbox.

Description
A specially shaped cam (1) is directly fitted on the gearbox output shaft. The final wheel (2) of the gearbox pivots freely on this shaft and has a housing into which the cam fits (1).
Between the cam and final wheel two rollers are symmetrically located held in place under the pressure of two springs (4).
When the geared motor is energised, it causes the final wheel (2) to rotate which, via the two rollers (3), in turn drives the output shaft.
If, under external force, the output shaft is turned in the same direction as the final wheel but at a higher speed, the two rollers (3) release the final wheel and the shaft speed becomes independent of the speed of the final wheel.
The rollers can be located according to whether the final wheel is rotating clockwise or anti-clockwise.
Can be used with gearboxes 81 021 0 and 81 033 0.

Nº	Legend
1	Cams
2	Einstellräder
3	Roller
4	

Dimensions (mm)

82 524 0 - 82 524 4

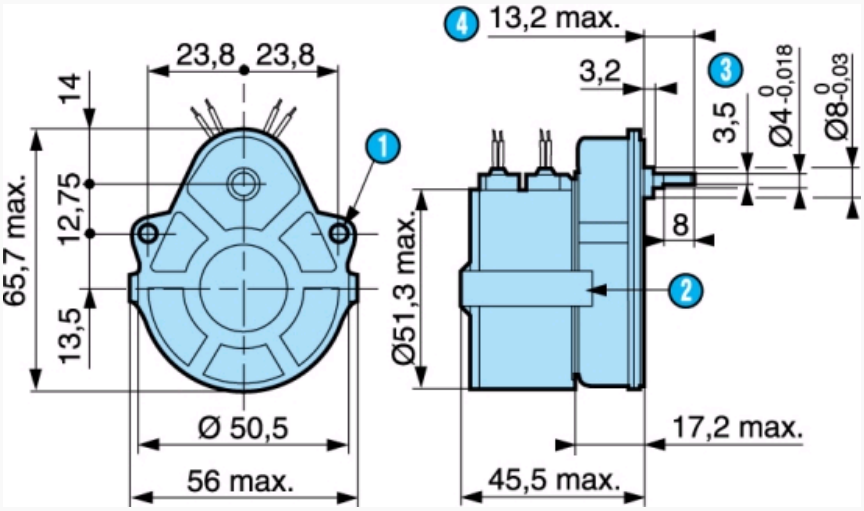

Nº	Legend
1	2 fixing holes Ø 3.2
2	Fixing clip
3	3.5 across flat
4	pushed-in shaft

Dimensions (mm)

Shaft 79 200 967

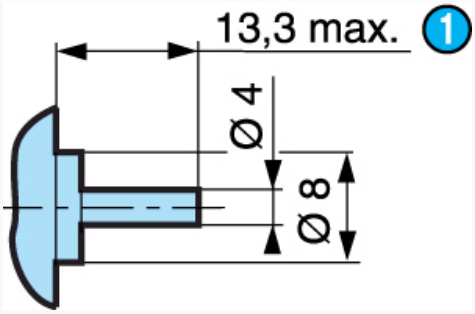

Nº	Legend
1	(pushed-in shaft)

Dimensions (mm)

Shaft 79 200 779

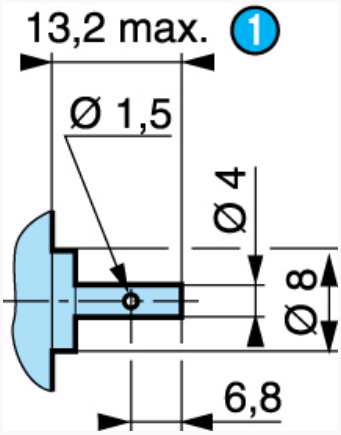

Nº	Legend
1	(pushed-in shaft)

Dimensions (mm)

Shaft 70 999 421 SP1295-10

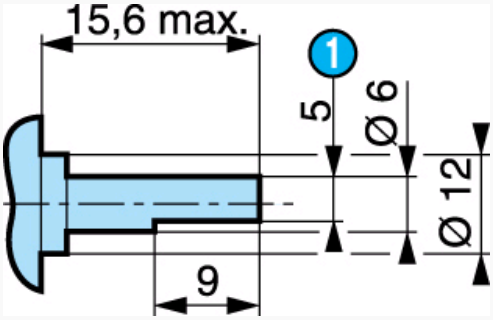

Nº	Legend
1	5 across flat

Curves

Torque/speed curves 82 524 0

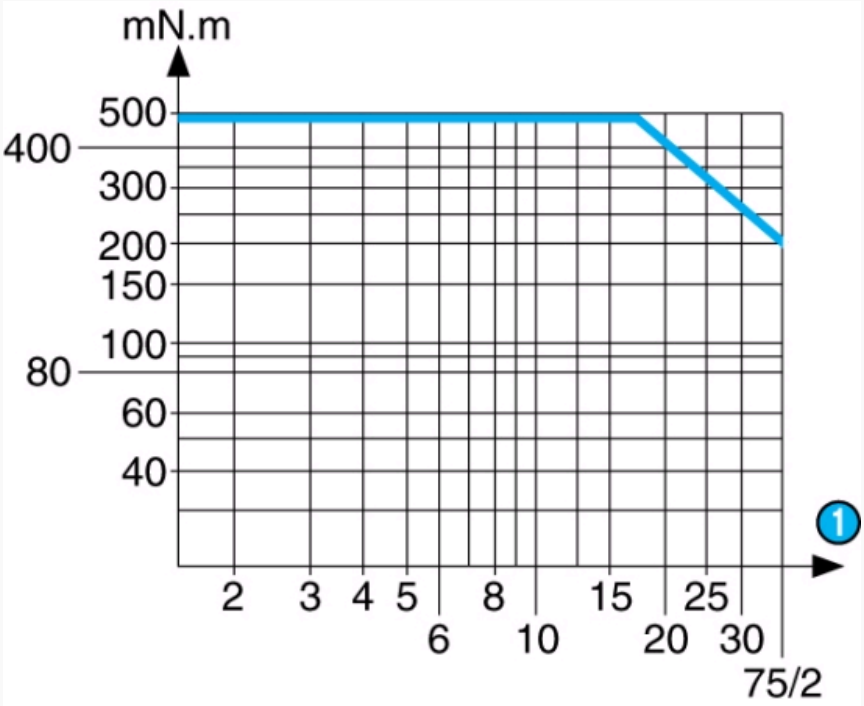

Nº	Legend
1	RPM

Connections

In parallel
Motors 82 520 0 - 82 520 4

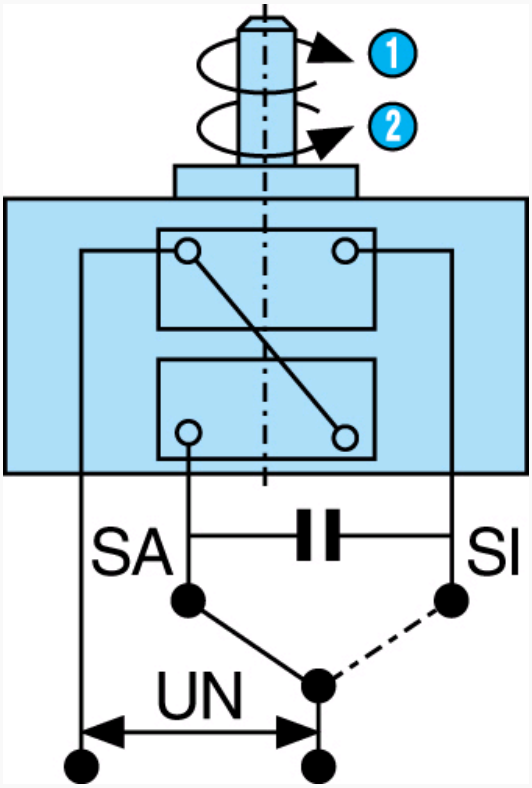

Nº	Legend
1	SA : Clockwise
2	SI : Anti-clockwise

Product adaptations



- Different voltages available
- Special cable lengths
- Special connectors
- Special output shafts
- Special gearbox ratios
- Special gear wheel material
- Special output bearing

Unless otherwise specified, the characteristics given are applicable to all or part of the product range selected