CROUZET MOTORS

# Ø 42 mm 14 to 31 Watts 16 W Part number 82810505



- Usable power : 12 to 22 Watts
- For high-power drive applications
- Sintered bronze bearings lubricated for life
- Power supply by 4.75 mm tags
- Interchangeable brushes
- Optional channel encoder

## Part numbers

| | Type | Type | Voltage | References |
|---|---|---|---|---|
| 82810505 | 16 W | 828105 | 24 V | With 1 pulse/revolution encoder |

## Specifications

| | |
|---|---|
| **No-load characteristics** | |
| Speed of rotation (rpm) | 3860 |
| Absorbed power (W) | 11,28 |
| Absorbed current (A) | 0,47 |
| **Nominal characteristics** | |
| Speed (rpm) | 2750 |
| Torque (mNm) | 45 |
| Usable power (W) | 13 |
| Absorbed power (W) | 32 |
| Absorbed current (A) | 1,32 |
| Gearbox case temperature rise (°C) | 33 |
| Efficiency (%) | 40,8 |
| **General characteristics** | |
| Insulation class (conforming to IEC 85) | F (155 °C) |
| Protection (IEC/EN 60529) | IP20 |
| Max. output power (W) | 16 |
| Start torque (mNm) | 156 |
| Starting current (A) | 3,4 |
| Resistance (Ω) | 7,06 |
| Inductance (mH) | 16,94 |
| Torque constant (Nm/A) | 0,0532 |
| Electrical time constant (ms) | 2,4 |
| Mechanical time constant (ms) | 23 |
| Thermal time constant (mn) | 8 |
| Inertia ($g.cm^2$) | 72 |
| Weight (g) | 310 |
| Number of of segments | 8 |
| Service life (h) | 2000 |
| Sintered bronze bearings | ● |
| Replaceable brushes | ● |
| **Encoder characteristics** | |
| Output current (mA) | < 25 (25 °C) |
| Supply (V) | 4,5 →30 DC |
| Ambient temperature (°C) | -40 →85 °C |

## Made to order products, available on request

- Built-in interference suppression (82 830 5)
- Special interference suppression (82 800 5 - 82 810 5)
- Other supply voltages
- Motor with 1 ball bearing at front (82 800 5 or 82 810 5) (essential for vertical motor)
- Shaft lengths at front and/or rear
- Reversible 5 pulses/revolution magnetic encoder (1 or 5 pulses/revolution)
- Other fixing flanges on front or rear
- Short version possible on 82 830 5 (L = 90 mm)

## Dimensions (mm)

**828005 - 828105**

*Unless otherwise specified, the characteristics given are applicable to all or part of the product range selected*

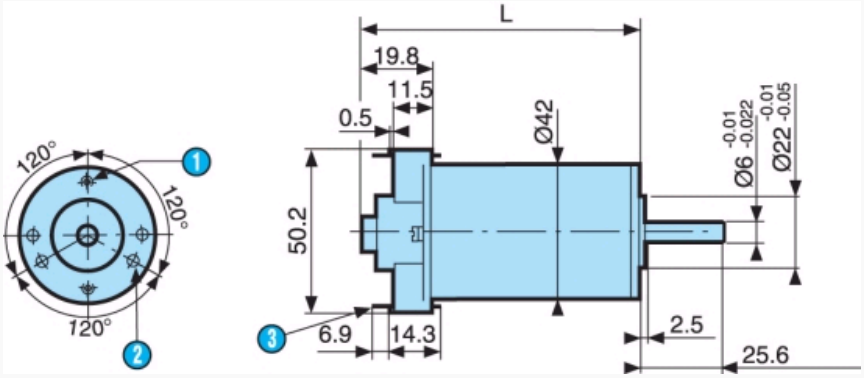


| Nº | Legend |
|---|---|
| 1 | 2 x M3 at 180°, depth 5 mm over Ø 32 |
| 2 | 2 holes Ø 2.75 at 120° depth 5 mm over Ø 32 |
| 3 | 2 tags IEC 760, series 4.8 x 0.5 |
| | L : 828005 : 84.8 mm max. |
| | L : 828105 : 59.8 mm max. |

## Dimensions (mm)

**Dimensions with magnetic encoder**

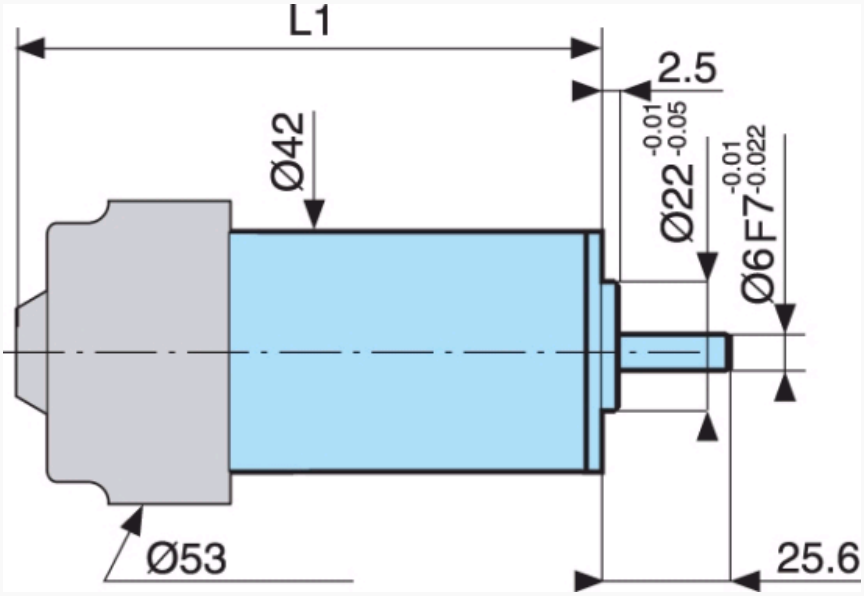


| Nº | Legend |
|---|---|
| | L1 : 828005 : 99.1 mm max. |
| | L1 : 828105 : 84.1 mm max. |

## Curves

**828105**

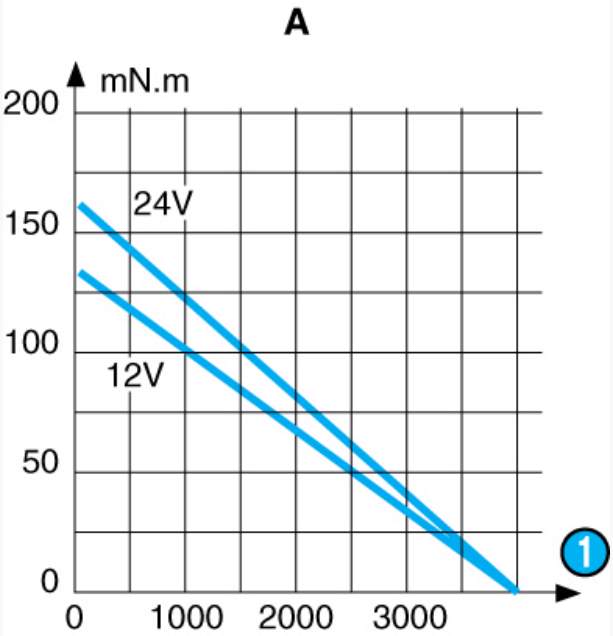


| Nº | Legend |
|---|---|
| 1 | rpm |
| | Torque/speed curve |

## Curves

**828105**

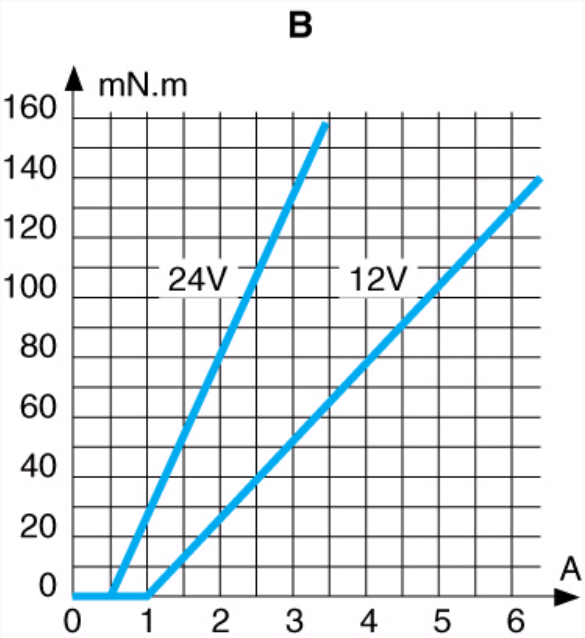


| Nº | Legend |
|---|---|
| | Torque/current curve |

## Connections

**Encoder and connector : STOCKO MKS 3735-6-0-505**

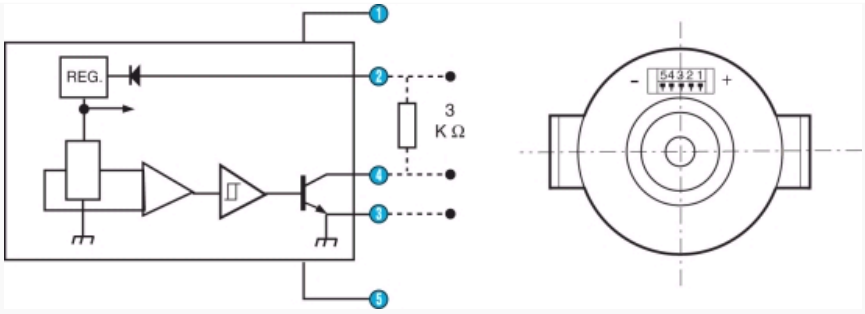


Part number of female connector to be used : STOCKO MKF 17-230 / 260 / 330 / 360

| Nº | Legend |
|---|---|
| 1 | Motor power supply |
| 2 | +5 →+24 V DC (encoder power supply) |
| 3 | 0 V DC (encoder power supply) |
| 4 | Encoder signal output |
| 5 | Motor power supply |

## Product adaptations

- Special output shaft
- Pinion on output shaft
- Special supply voltage
- Special ball bearings
- Optical or Hall effect encoder
- Special mounting plate
- Special connections