# CER0032A

**1575.42 MHz GPS BPF**

Revision Date: March 27, 2018

## Features

- Low Loss
- High Rejection
- Small Size

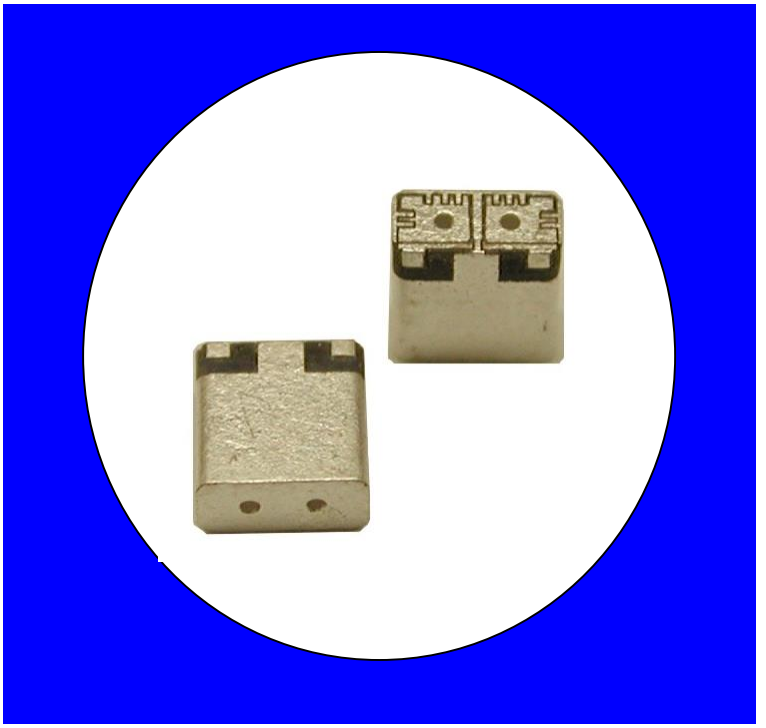

## Description

Surface mount, silver (Ag) coated, ceramic filter. Developed for use in subscriber GPS L1 Applications.

Weight: 0.17 grams typical

Material: Filter is composed of a ceramic block plated with Ag.

Filter complies with RoHS standards.

## Electrical Specifications

| Parameter | Frequency (MHz) | Typical @ 25ºC | Spec. over -40ºC to +85ºC |
|---|---|---|---|
| Passband Insertion Loss | 1573.42 – 1577.42 | 1.25 dB | 1.5dB max |
| Passband Return Loss | 1573.42 – 1577.42 | 15.0 dB | 11 dB min |
| Passband Ripple | 1573.42 – 1577.42 | 0.1 dB | 0.5 dB max |
| Attenuation | 824 – 849 | 49.0 dB | 45 dB min |
| | 1850 – 1910 | 53.0 dB | 45 dB min |
| | 1710 – 1785 | 27.0 dB | 20 dB min |
| | 2400 – 2484 | 50.0 dB | 20 dB min |

Note: Supplier shall test each filter to the critical electrical specifications of the above table. Any subsequent audits may deviate from in value due to measurement repeatability among different test systems. Such deviations shall not exceed the following limits:

| Specification | Allowance |
|---|---|
| Insertion Loss | 0.1 dB |
| Return Loss | 1.0 dB |
| Stopbands | 1.0 dB |

•"This product is covered by one or more of the following U.S. and foreign patents including: US 4,692,726;US 4,742,562; US 4,800,348;US 4,829,274;US 5,146,193;EP 0573597;DE 0573597;FR 0573597;JP 508149/92;KR 142171;US 5,162,760;US 5,218,329;US 5,250,916;US 5,327,109;US 5,488,335;CA 2114029;FR 9306297;GB 2273393;JP 3205337;KR 115113;CN 93106228.4;US 5,512,866;EP 0706719;DE 0706719;FR 0706719;GB 0706719;CN 95190359.4;US 5,602,518;US 5,721,520;US 5,745,018;EP 0910875;DE 0910875;DK 0910875;FR 0910875;GB 0910875;IE 0910875;JP 505182/98;KR 10-323013;US 5,994,978;US 6,462,629;CN 00810420.4;US 6,559,735;US 6,650,202;US 6,834,429.Other US and foreign patents pending.

•CTS Corporation 2006 reserves all copyrights in the layout, design and configuration of the patterns on this product."

# CER0032A

**1575.42 MHz GPS BPF**

Revision Date: March 27, 2018

## Mechanical Drawing

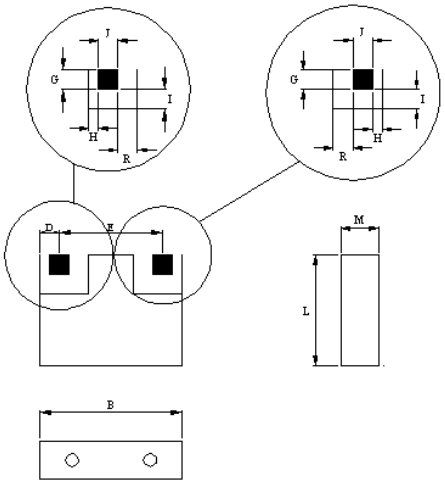


| Dim | Nominal (mm) | Tolerance (mm) +/- or max |
|---|---|---|
| A | | |
| B | 4.0 | max |
| C | | |
| D | 0.53 | 0.13 |
| E | 2.9 | 0.13 |
| F | | |
| G | 0.51 | 0.13 |
| H | 0.25 | 0.13 |
| I | 0.51 | 0.13 |
| J | 0.51 | 0.13 |
| L | 4.2 | max |
| M | 2.0 | max |
| R | 0.51 | 0.13 |

## Electrical response

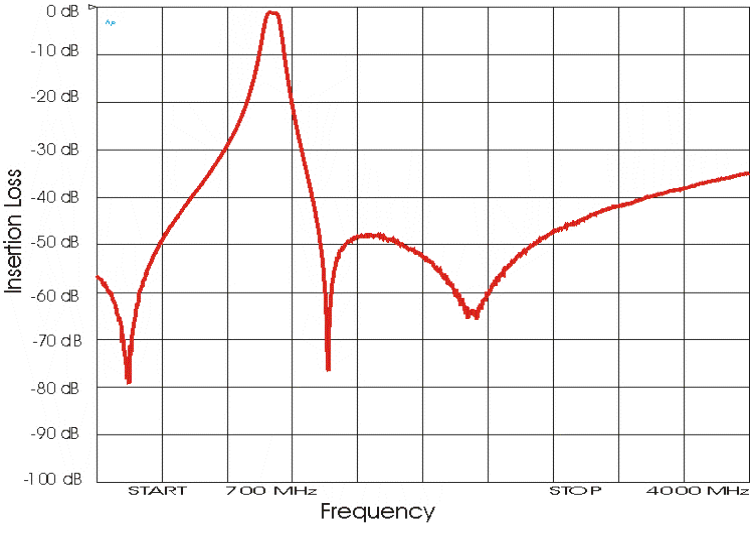


## PCB Layout

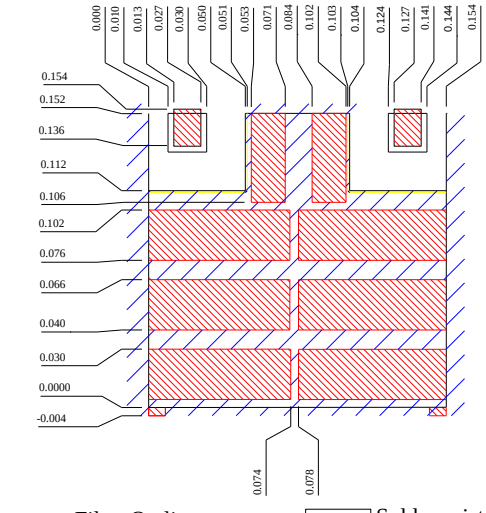


## Packaging and Marking

| DIMENSION | UNITS | SPECIFICATION |
|---|---|---|
| REEL DIAMETER | mm | 178 |
| REEL WEIGHT | kg | 0.45 |
| REEL QUANTITY | Ea. | 500 |

