CER0367A

2.450 GHz BPF

Rev 1 – Origin Date: February 17, 2006 – Revision Date: March 31, 2006

Features

- High Rejection
- Low ripple, Low Loss
- Small Size

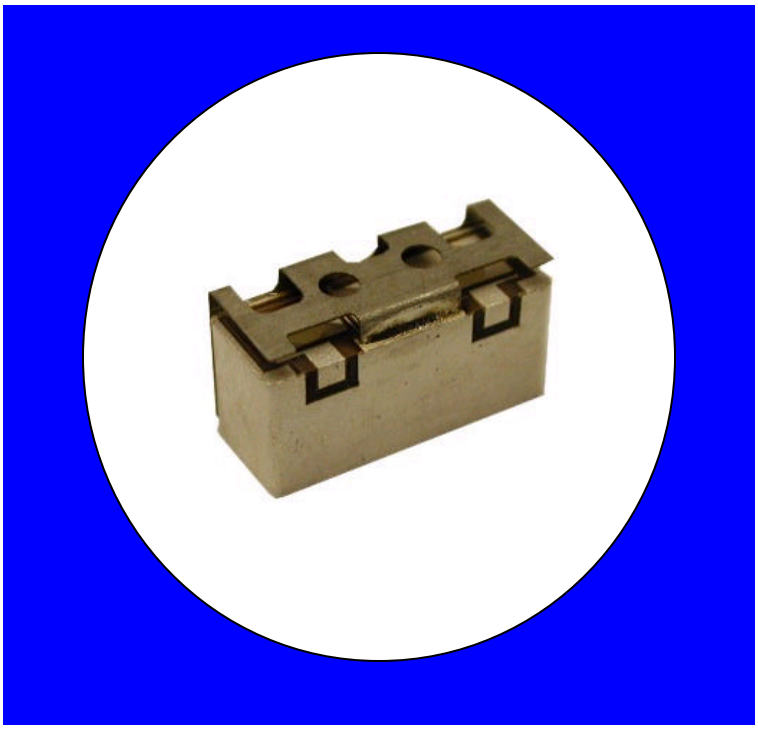

Description

Surface mount, silver (Ag) coated barium ceramic filter.

Weight: 0.7 grams typical

Material: Filter is composed of a ceramic block plated with Ag.

Filter complies with RoHS standards.

Electrical Specifications

Parameter	Frequency MHz	Typical @ 25ºC	Specification @ 25ºC	Spec over -40ºC to +85ºC
Passband Iloss	2400 - 2500	-0.85	-1.00	-1.20
Passband Ripple	2400 - 2500	0.25	0.40	0.50
Passband Return Loss @ TX	2400 - 2500	-13.50	-12.00	-12.00
Passband Return Loss @ Ant	2400 - 2500	-13.50	-12.00	-12.00
Attneuation	2100	-45.00	-40.00	-40.00
	2800	-33.00	-30.00	-30.00
3 dB Bandwidth		180 MHz		
Power into any port		1 Watt max		

Note: Supplier shall test each filter to the critical electrical specifications of the above table. Any subsequent audits may deviate from in value due to measurement repeatability among different test systems. Such deviations shall not exceed the following limits:

Specification	Allowance
Insertion Loss	0.1 dB
Return Loss	1.0 dB
Stopbands	1.0 dB

•"This product is covered by one or more of the following U.S. and foreign patents including: US 4,692,726;US 4,742,562; US 4,800,348;US 4,829,274;US 5,146,193;EP 0573597;DE 0573597;FR 0573597;JP 508149/92;KR 142171;US 5,162,760;US 5,218,329;US 5,250,916;US 5,327,109;US 5,488,335;CA 2114029;FR 9306297;GB 2273393;JP 3205337;KR 115113;CN 93106228.4;US 5,512,866;EP 0706719;DE 0706719;FR 0706719;GB 0706719;CN 95190359.4;US 5,602,518;US 5,721,520;US 5,745,018;EP 0910875;DE 0910875;DK 0910875;FR 0910875;GB 0910875;IE 0910875;JP 505182/98;KR 10-323013;US 5,994,978;US 6,462,629;CN 00810420.4;US 6,559,735;US 6,650,202;US 6,834,429.Other US and foreign patents pending.

•CTS Corporation 2006 reserves all copyrights in the layout, design and configuration of the patterns on this product."

Rev 1 – Origin Date: February 17, 2006 – Revision Date: March 31, 2006

Mechanical Drawing

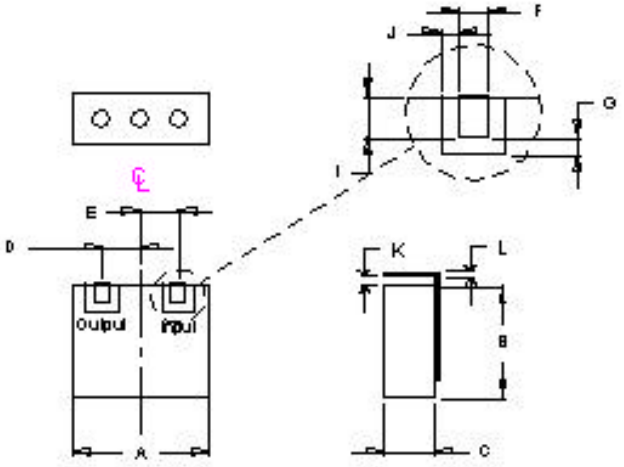

Dim	Nominal (mm)	Tolerance (mm) +/- or max
A	11.75	Max
B	4.30	Max
C	4.50	Max
D	3.30	0.127
E	3.30	0.127
F	1.02	0.127
G	0.51	0.127
I	1.02	0.127
J	0.51	0.127
K	1.00	0.127
L	0.13	0.127

Electrical response

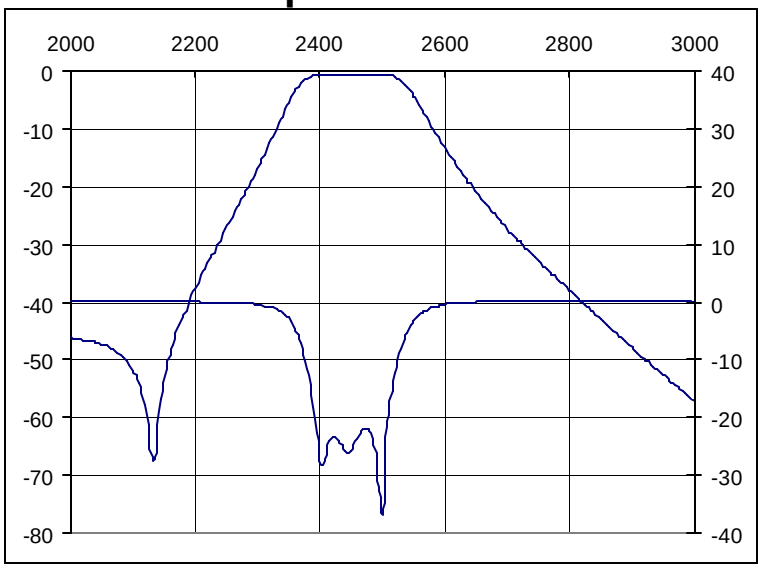

PCB Layout

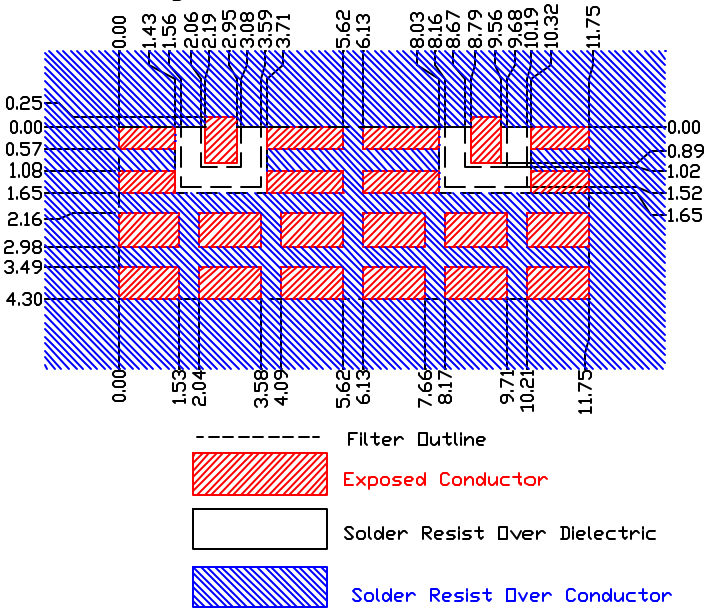

Packaging and Marking

DIMENISION	UNITS	SPECIFICATION
REEL DIAMETER	mm	330
REELWEIGHT	kg	1
REEL QUANTITY	ea.	1000

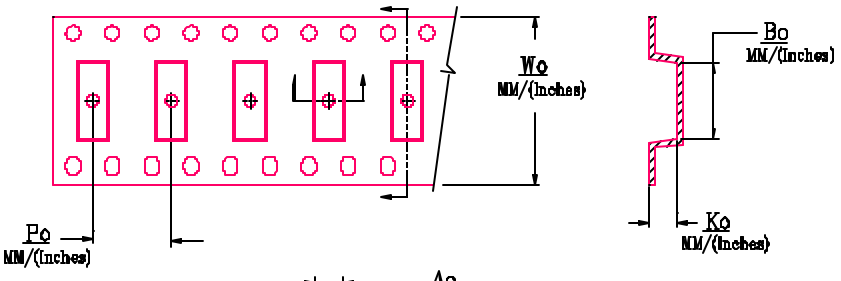

Customer Feed Direction

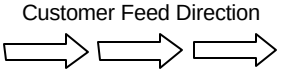

MODEL NO.	Wo	Ao	Bo	Ko	Po
CER0260A	24 0/(0 945)	5 73/(0.228)	12 05/(0.474)	4 80/(0 189)	12 0/(0 472)