KFF6668A

1033 MHz TCAS BPF

Rev 0 – Origin Date: July 11, 2005 – Revision Date: July 11, 2005

Features

- Narrow Bandwidth
- Low Loss
- Small Size

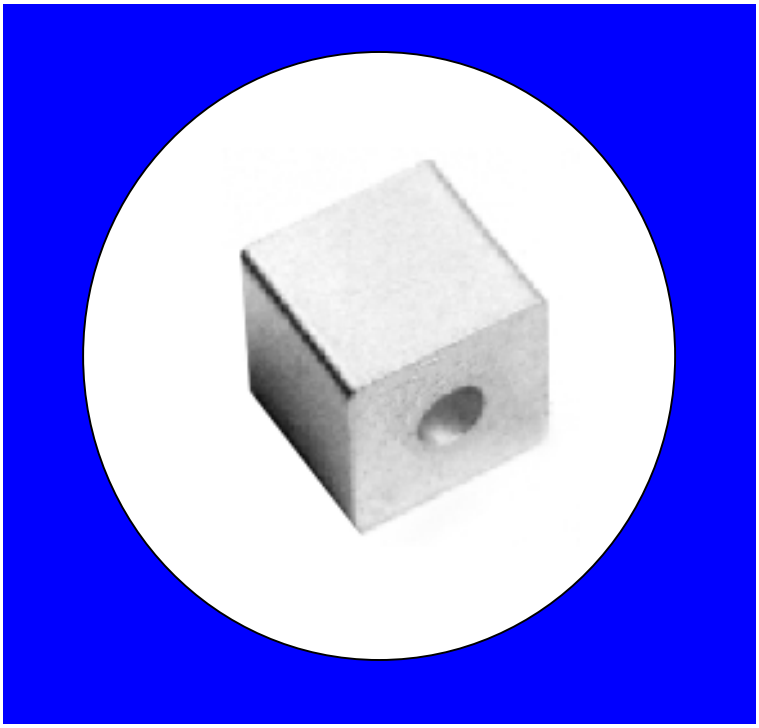

Description

Rugged mount, silver (Ag) coated ceramic filter. Developed for use in TCAS applications.

Weight: 5.73 grams typical

Material: Filter is composed of a ceramic block plated with Ag.

Filter complies with RoHS standards.

Electrical Specifications

Parameter	Frequency (MHz)	Typical @ 25ºC	Spec. @ 25ºC
Passband Insertion Loss	1033	1.0 dB	1.4 dB max
Passband Return Loss	1033	17.0 dB	15.5 dB min
Attenuation	1027	5.5 dB	3.0 dB min
Attenuation	1039	5.5 dB	3.0 dB min
Power Rating			1W
Impedance			50 Ω

Note: Supplier shall test each filter to the critical electrical specifications of the above table. Any subsequent audits may deviate from in value due to measurement repeatability among different test systems. Such deviations shall not exceed the following limits:

Specification	Allowance
Insertion Loss	0.1 dB
Return Loss	1.0 dB
Stopbands	1.0 dB

•"This product is covered by one or more of the following U.S. and foreign patents including: US 4,692,726;US 4,742,562; US 4,800,348;US 4,829,274;US 5,146,193;EP 0573597;DE 0573597;FR 0573597;JP 508149/92;KR 142171;US 5,162,760;US 5,218,329;US 5,250,916;US 5,327,109;US 5,488,335;CA 2114029;FR 9306297;GB 2273393;JP 3205337;KR 115113;CN 93106228.4;US 5,512,866;EP 0706719;DE 0706719;FR 0706719;GB 0706719;CN 95190359.4;US 5,602,518;US 5,721,520;US 5,745,018;EP 0910875;DE 0910875;DK 0910875;FR 0910875;GB 0910875;IE 0910875;JP 505182/98;KR 10-323013;US 5,994,978;US 6,462,629;CN 00810420.4;US 6,559,735;US 6,650,202;US 6,834,429.Other US and foreign patents pending.

•CTS Corporation 2006 reserves all copyrights in the layout, design and configuration of the patterns on this product."

Mechanical Drawing

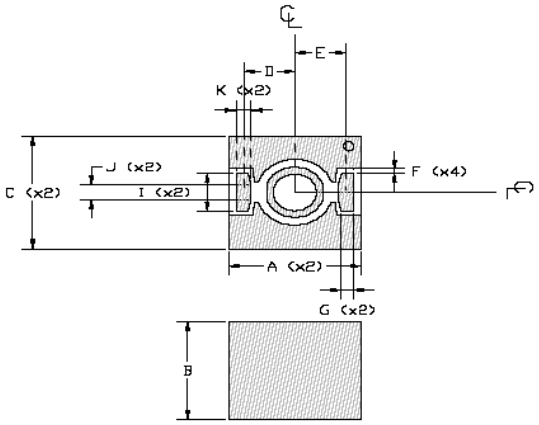

Dim	Nominal (mm)	Tolerance (mm) +/- or max
A	11.569	max
B	10.871	max
C	11.569	max
D	4.445	0.127
E	4.445	0.127
F	0.472	0.127
G	1.041	0.127
I	3.835	0.127
J	1.549	0.127
K	1.295	0.127

Electrical response

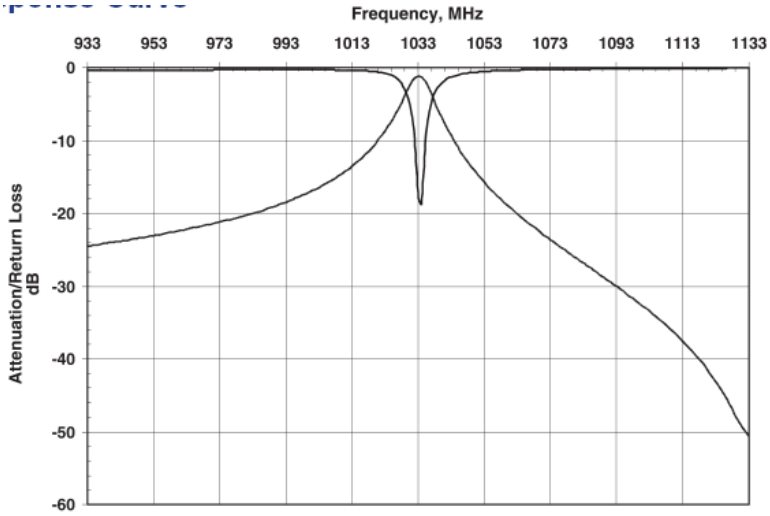

PCB Layout

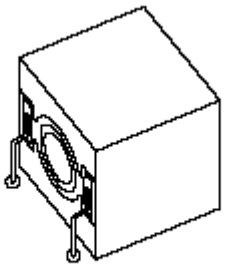

MOUNTING VARIES BY INDIVIDUAL CUSTOMER.

Packaging and Marking

This product is shipped in pre-formed foam trays.

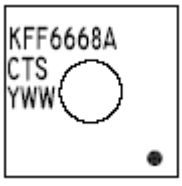

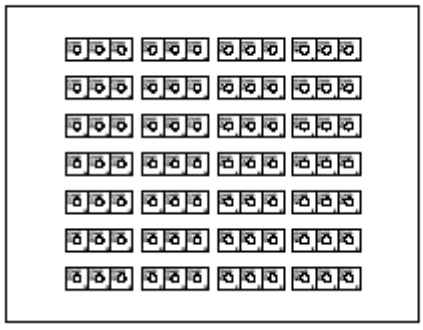

10 28 Slot Gray Foam Trays

(840 max. per box)