MODEL: CBT-09427-SMT-TR | DESCRIPTION: MAGNETIC BUZZER TRANSDUCER

FEATURES

- surface mount
- side sound port
- externally driven
- high operating temperature range

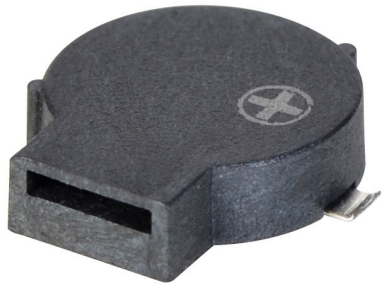

RoHS

SPECIFICATIONS

parameter	conditions/description	min	typ	max	units
rated voltage	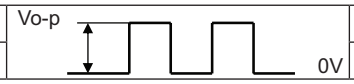		3.6		Vo-p
operating voltage		2.5		4.5	Vo-p
current consumption	at rated voltage, 2,730 Hz square wave, ½ duty			110	mA
rated frequency			2,730		Hz
sound pressure level	at 10 cm (A-weight), rated voltage, 2,730 Hz square wave, ½ duty	83	87		dBA
coil resistance		13	16	19	Ω
dimensions	Ø9.0 x 2.5				mm
weight			0.37		g
material	LCP				
terminal	SMT type (Au plating)				
operating temperature		-40		85	°C
storage temperature		-40		85	°C
RoHS	yes				

Notes: 1. All specifications measured at 5~35°C, humidity at 45~85%, under 86~106 kPa pressure, unless otherwise noted.

SOLDERABILITY

parameter	conditions/description	min	typ	max	units
reel storage	at relative humidity <60%			30	°C
reflow soldering[2]	see recommended reflow soldering profile			260	°C
drying conditions[3]	bake at 40°C for 24 hours				

Note: 2. It is recommended to reflow solder within 48 hours from opening vacuum packaging at a temperature <30°C & relative humidity <60%.
3. When out of packaging for more than 48 hours.

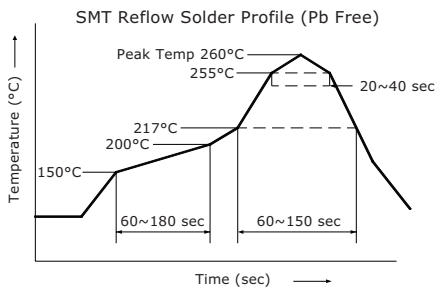

MECHANICAL DRAWING

units: mm
tolerance: ±0.5mm

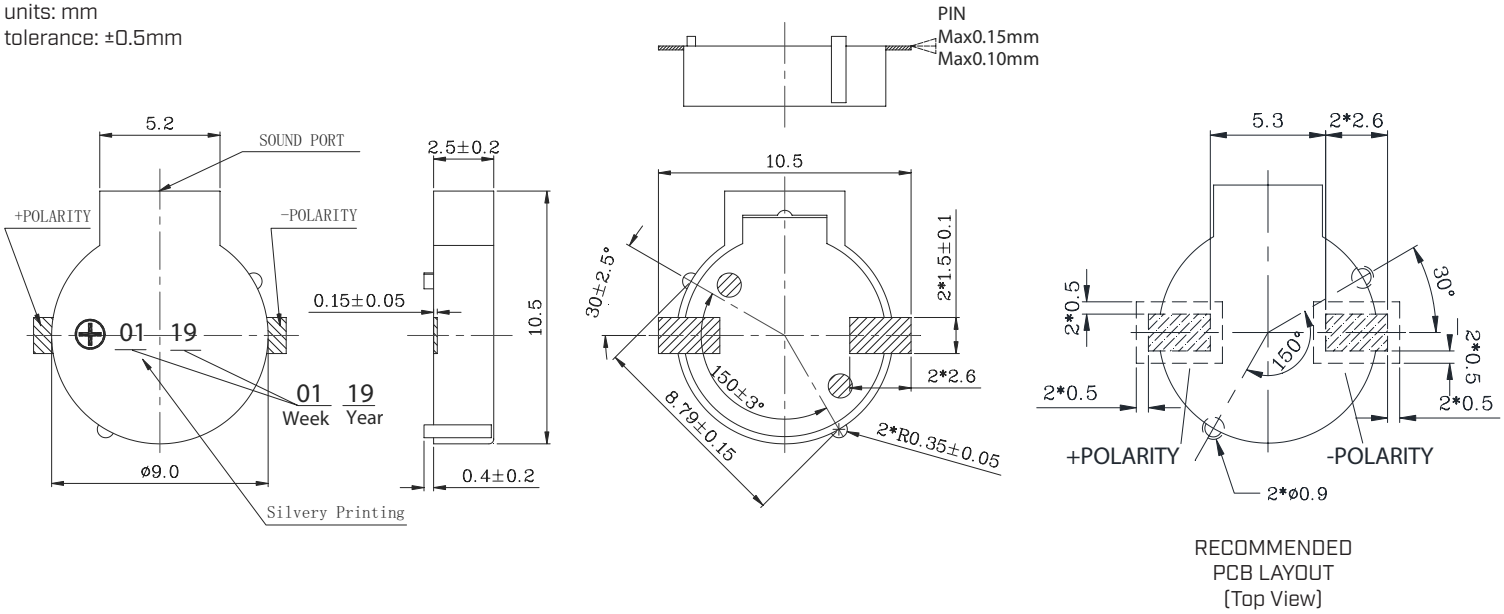

RECOMMENDED
PCB LAYOUT
(Top View)

FREQUENCY RESPONSE CURVE

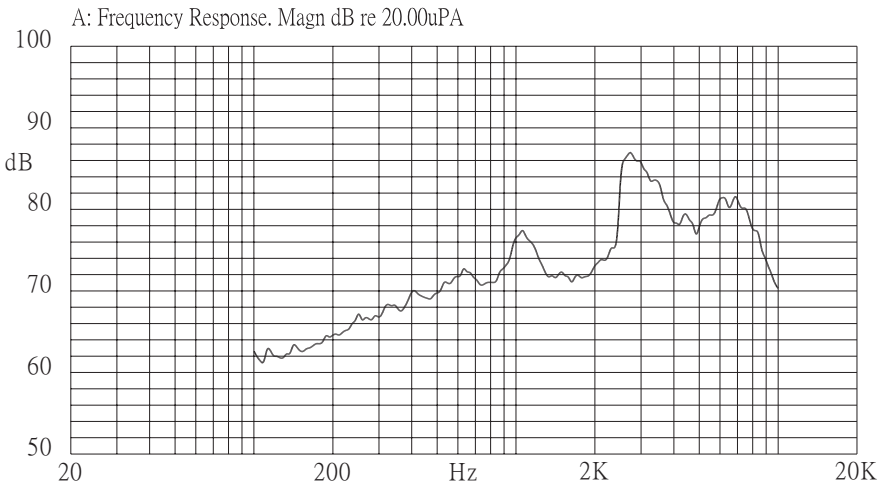

MEASUREMENT METHOD

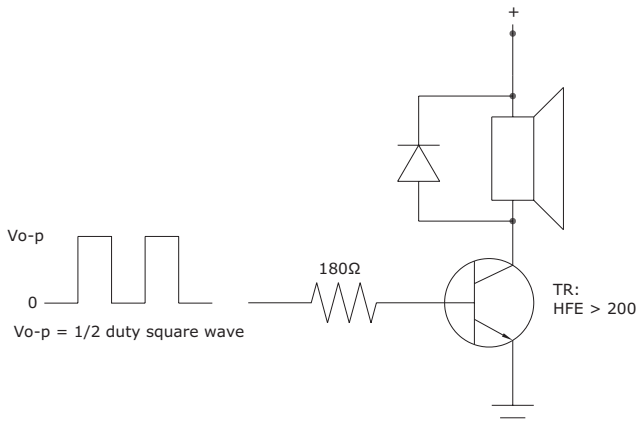

PACKAGING

units: mm

Reel Size: Ø330 mm
Inner Box Size: 330 x 330 x 30 mm
Carton Size: 370 x 350 x 350 mm
Reel QTY: 800 pcs per reel
Carton QTY: 8,000 pcs per carton

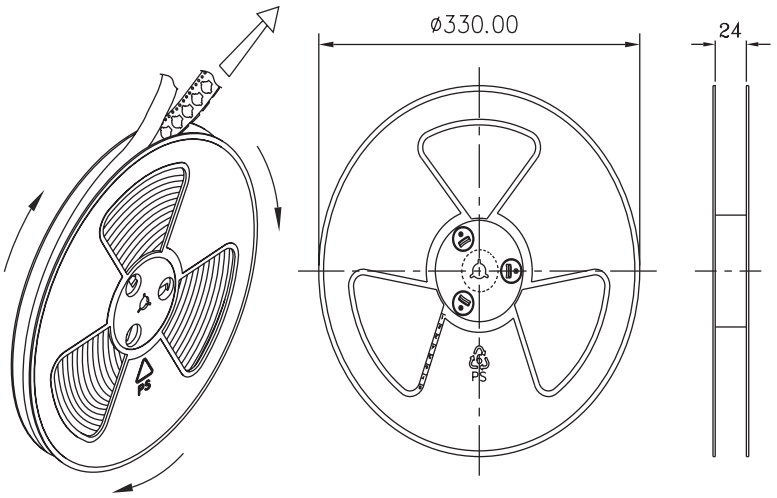

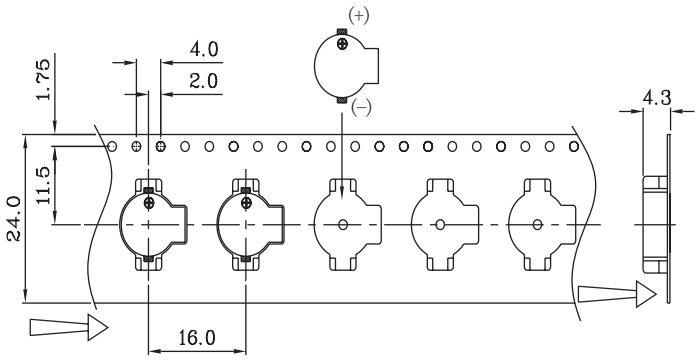

Lot No.	XXXXXXXXXX
Model No.	XXXXXXXXXX
Quantity.	XXXX Pcs
Date: DD MM YY MADE IN CHINA	G

* The label sticked on inner boxes and the outer of carton.

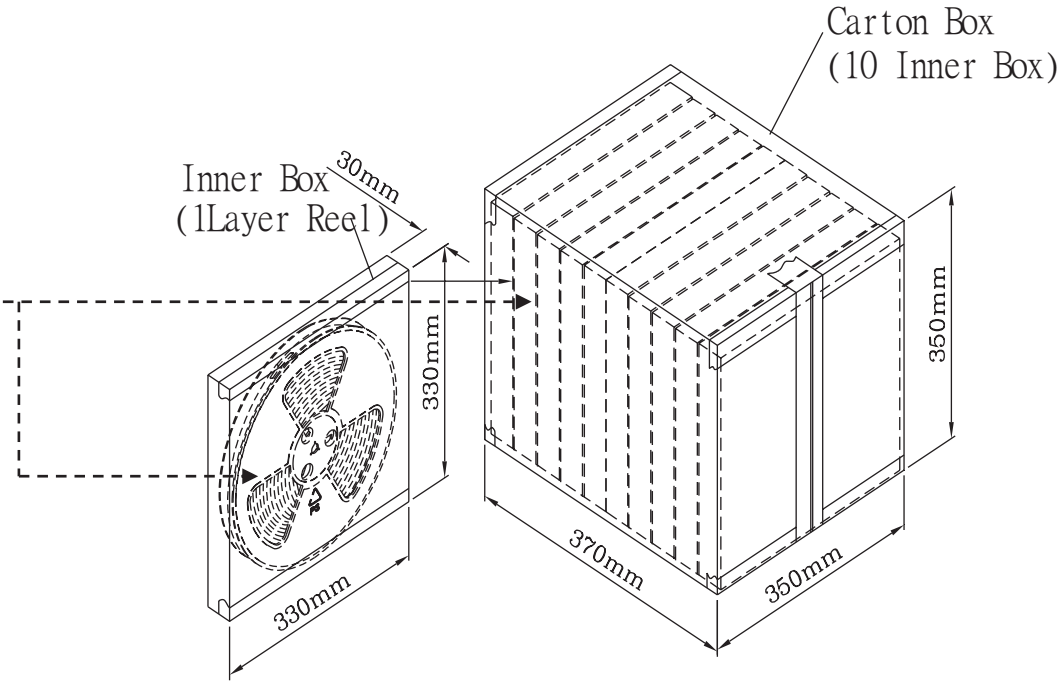

REVISION HISTORY

rev.	description	date
1.0	initial release	09/11/2014
1.01	updated datasheet	03/13/2015
1.02	added storage and drying conditions, and tape and reel packaging details	07/26/2019
1.03	added tolerance detail, brand update	12/10/2019
1.04	logo, datasheet style update	08/05/2022

The revision history provided is for informational purposes only and is believed to be accurate.

CUI Devices offers a one (1) year limited warranty. Complete warranty information is listed on our website.

CUI Devices reserves the right to make changes to the product at any time without notice. Information provided by CUI Devices is believed to be accurate and reliable. However, no responsibility is assumed by CUI Devices for its use, nor for any infringements of patents or other rights of third parties which may result from its use.

CUI Devices products are not authorized or warranted for use as critical components in equipment that requires an extremely high level of reliability. A critical component is any component of a life support device or system whose failure to perform can be reasonably expected to cause the failure of the life support device or system, or to affect its safety or effectiveness.

cuidevices.com