CUDEVICES

SERIES: CDS-4837-54XX | **DESCRIPTION:** SPEAKER

FEATURES

- double magnet design
- 4 ohm
- 84 dB at 1 m



RoHS

SPECIFICATIONS

parameter	conditions/description	min	typ	max	units
input power			5.0	6.0	W
impedance	at 1 kHz, 2.0 V	3.4	4	4.6	Ω
resonant frequency (Fo)		136	170	204	Hz
frequency response		Fo		20,000	Hz
sound pressure level	at 1.0 W, 1 m, avg from 2~4 kHz	81	84	87	dB
distortion	at 2.0 kHz, 1.0 W			5	%
buzz, rattle, etc.	must be normal at sine wave between 100 Hz ~ 2 kHz			4.47	V
polarity	cone moves forward w/ positive dc current to “+” terminal				
dimensions	Ø48 x 30.3				mm
magnet	Nd-Fe-B				
frame material	ABS (black)				
cone material	paper (black)				
weight			76		g
operating temperature		-20		60	°C
storage temperature		-25		70	°C
hand soldering	for 3~5 seconds	370	380	390	°C
RoHS	yes				

Notes: 1. All specifications measured at 23~25°C, humidity at 55% max, 86~106 kPa, unless otherwise noted.

PART NUMBER KEY

CDS - 4837 - 54 XX

Base Number

Termination Options:
SP = solder terminals
L100 = wire leads

MECHANICAL DRAWING (SOLDER TERMINALS)

units: mm
tolerance: ±0.3 mm

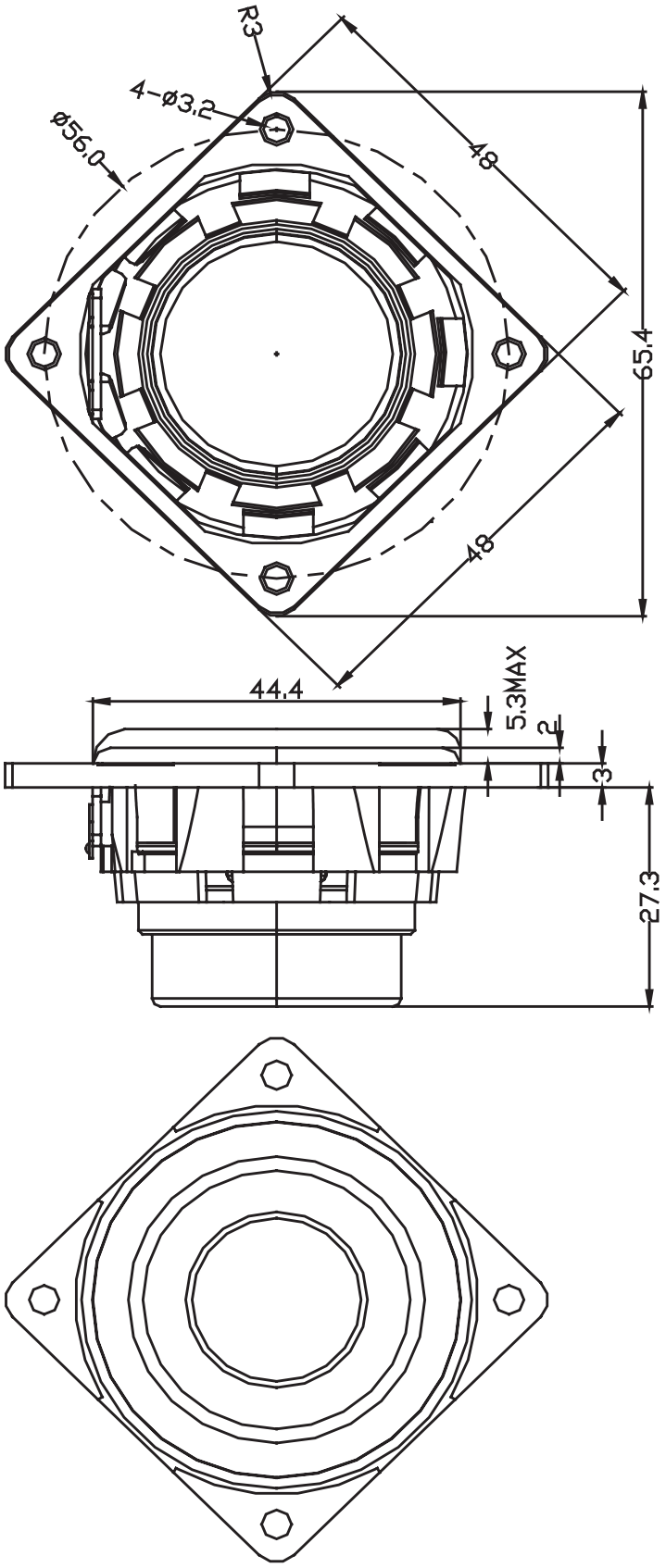

MECHANICAL DRAWING (WIRE LEADS)

units: mm
tolerance: ±0.3 mm

wire: UL1571 28 AWG

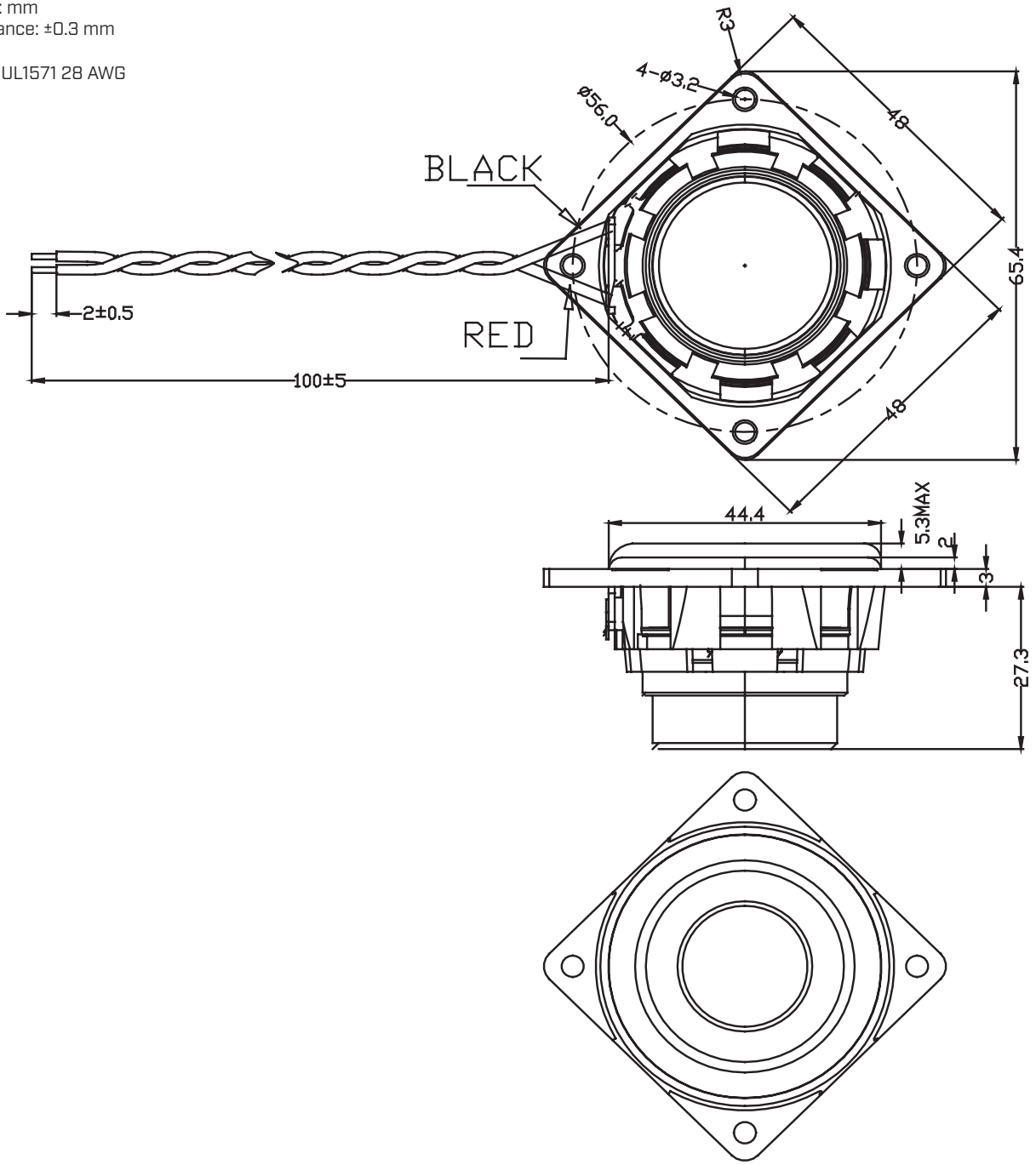

RESPONSE CURVES

Frequency Response Curve

Test Conditions: 1.0 W / 1.0 m (in anechoic chamber)

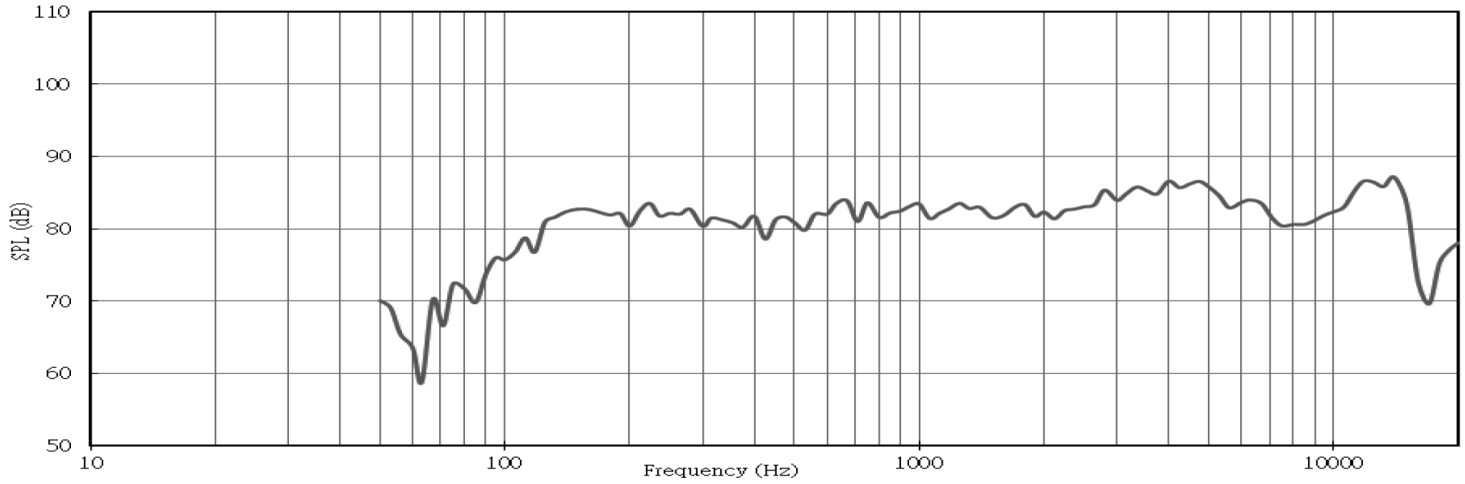

Total Harmonic Distortion Curve

Test Conditions: 1.0 W / 1.0 m (in anechoic chamber)

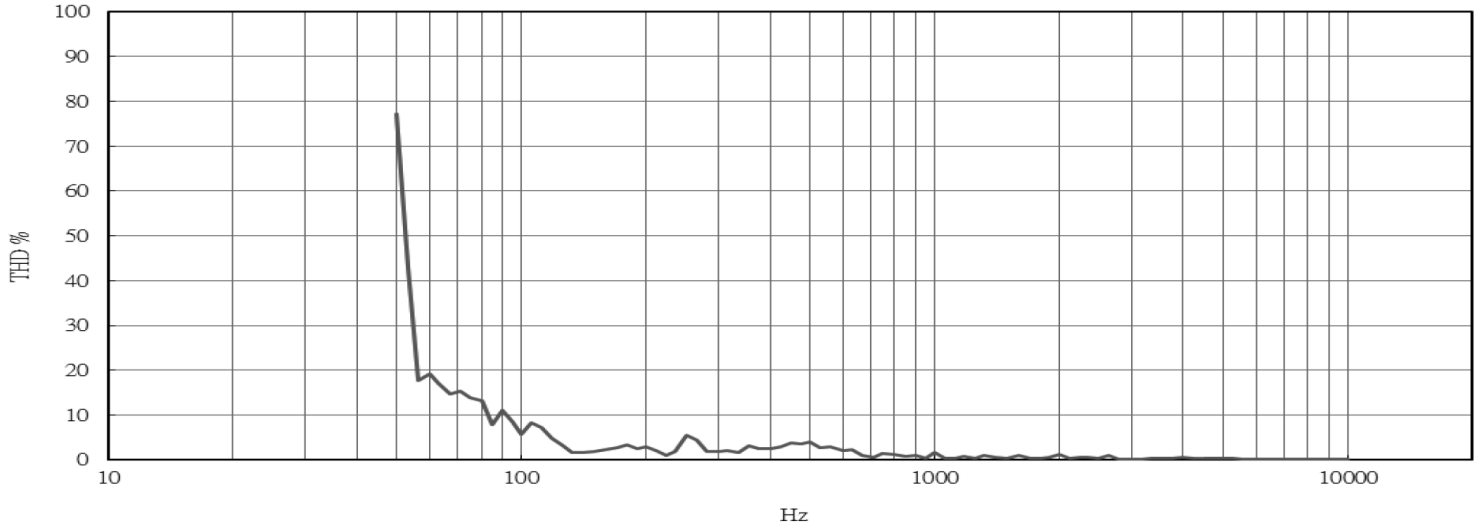

REVISION HISTORY

rev.	description	date
1.0	initial release	07/11/2023

The revision history provided is for informational purposes only and is believed to be accurate.

CUI Devices offers a one (1) year limited warranty. Complete warranty information is listed on our website.

CUI Devices reserves the right to make changes to the product at any time without notice. Information provided by CUI Devices is believed to be accurate and reliable. However, no responsibility is assumed by CUI Devices for its use, nor for any infringements of patents or other rights of third parties which may result from its use.

CUI Devices products are not authorized or warranted for use as critical components in equipment that requires an extremely high level of reliability. A critical component is any component of a life support device or system whose failure to perform can be reasonably expected to cause the failure of the life support device or system, or to affect its safety or effectiveness.

cuidevices.com