CUDEVICES

MODEL: CDS-5085-32-SP | **DESCRIPTION:** SPEAKER

FEATURES

- 32 Ohm
- rated 0.5 W
- solder pads



RoHS

SPECIFICATIONS

parameter	conditions/description	min	typ	max	units
input power	max power: 1 minute on, 2 minutes off, 10 cycles		0.5	1.0	W
impedance	at 2.0 kHz, 1.0 V	27.2	32	36.8	Ω
resonant frequency (Fo)	at 1.0 V	320	400	480	Hz
frequency response		Fo		20,000	Hz
sound pressure level	at 0.1 W, 0.1 m, avg at 0.6, 0.8, 1.0, 1.2 kHz in baffleboard	89	92	95	dB
distortion	at 1.0 kHz, rated power			5	%
buzz, rattle, etc.	must be normal at sine wave, between Fo ~ 10,000 Hz			4.0	V
polarity	cone moves forward w/ positive dc current to "+" terminal				
dimensions	Ø50 x 8.5				mm
magnet	Nd-Fe-B				
frame material	SPCC				
cone material	PET (black)				
terminal	solder pads				
weight			13.2		g
operating temperature		-20		60	°C
storage temperature		-30		70	°C
hand soldering	for maximum 2 seconds			380	°C
RoHS	yes				

Notes: 1. All specifications measured at 15~35°C, humidity at 45~85%, under 86~106 kPa pressure, unless otherwise noted.

MECHANICAL DRAWING

units: mm
tolerance: ±0.5 mm

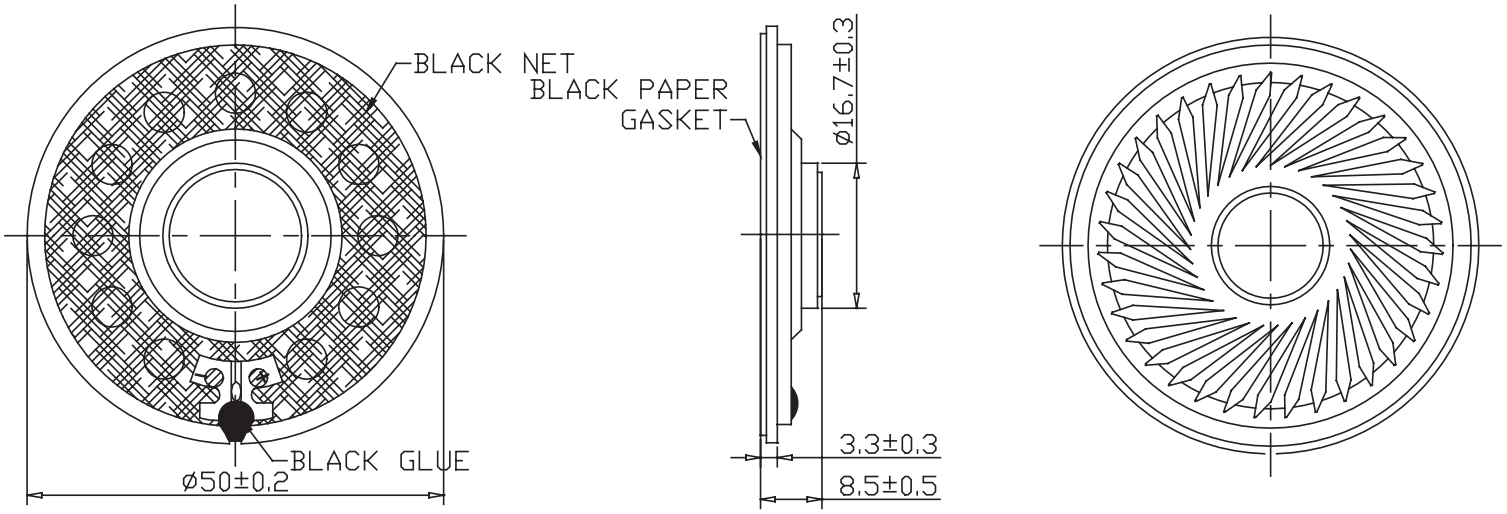

FREQUENCY RESPONSE CURVE

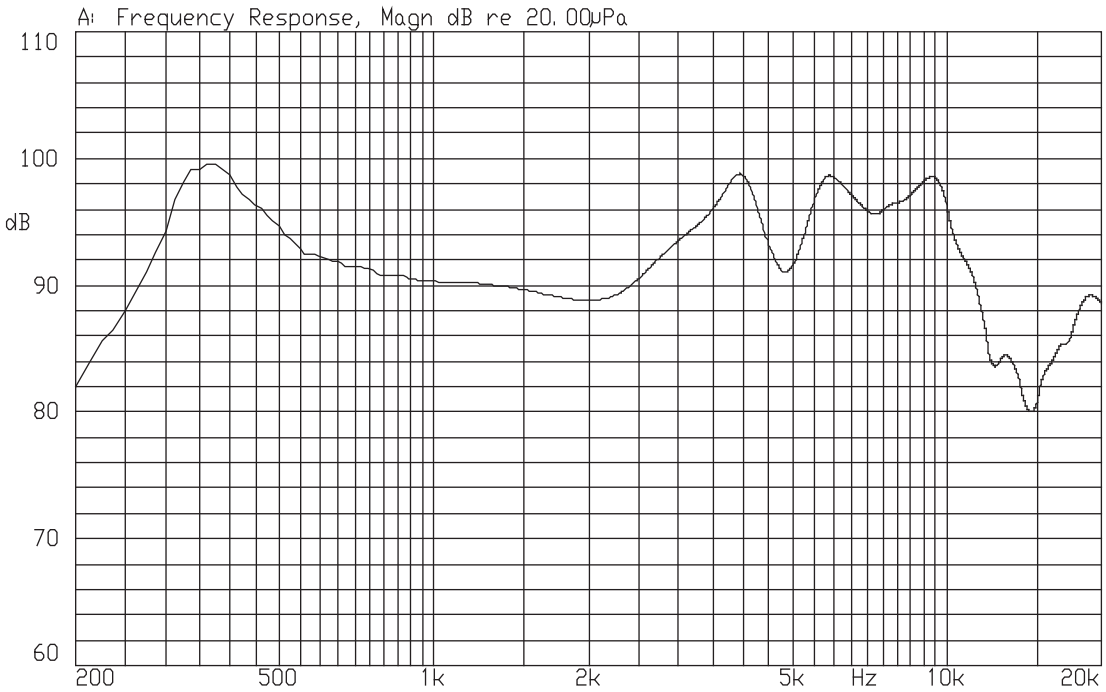

PACKAGING

units: mm

Tray QTY: 50 pcs per tray
Carton Size: 590 x 300 x 310 mm
Carton QTY: 500 pcs per carton

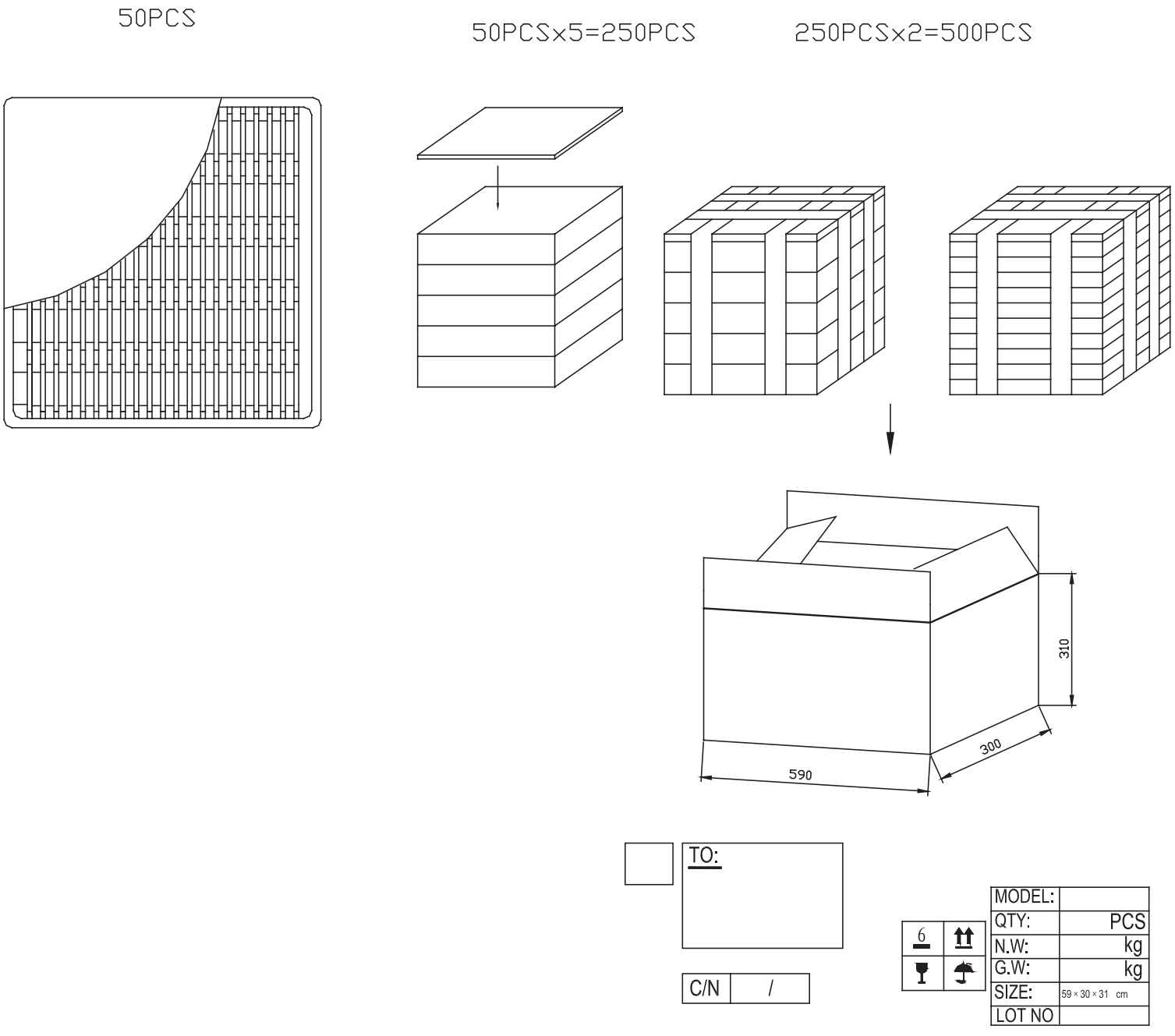

REVISION HISTORY

rev.	description	date
1.0	initial release	11/24/2021
1.01	logo, datasheet style update	08/05/2022

The revision history provided is for informational purposes only and is believed to be accurate.

CUI Devices offers a one (1) year limited warranty. Complete warranty information is listed on our website.

CUI Devices reserves the right to make changes to the product at any time without notice. Information provided by CUI Devices is believed to be accurate and reliable. However, no responsibility is assumed by CUI Devices for its use, nor for any infringements of patents or other rights of third parties which may result from its use.

CUI Devices products are not authorized or warranted for use as critical components in equipment that requires an extremely high level of reliability. A critical component is any component of a life support device or system whose failure to perform can be reasonably expected to cause the failure of the life support device or system, or to affect its safety or effectiveness.

cuidevices.com