MODEL: CDS-5819-68SP | DESCRIPTION: SPEAKER

FEATURES

- 6 ohm
- rated 6 W
- solder terminals
- IPX4



SPECIFICATIONS

parameter	conditions/description	min	typ	max	units
input power			6.0	7.0	W
impedance	at 1.0 kHz	6.8	8	9.2	Ω
resonant frequency (Fo)		360	450	540	Hz
frequency response		250		20,000	Hz
sound pressure level	at 1.0 W, 50 cm, avg 0.8, 1.0, 1.2, 1.5 kHz	85	88	91	dB
distortion	at 1.0 kHz, 1.0 W, 50 cm			5	%
buzz, rattle, etc.	must be normal at sine wave, frequency range			6.9	V
polarity	cone moves forward w/ positive dc current to “+” terminal				
dimensions	58 x 35 x 19.5				mm
magnet	Nd-Fe-B				
frame material	iron				
cone material	paper + cloth				
terminal	solder terminals				
weight			22.5		g
operating temperature		-20		55	°C
storage temperature		-25		60	°C
hand soldering	for maximum 2 seconds	360		380	°C
RoHS	yes				
IP level	IPX4				

Notes: 1. All specifications measured at 15~35°C, humidity at 25~75%, unless otherwise noted.

MECHANICAL DRAWING

units: mm
tolerance: ±0.2 mm

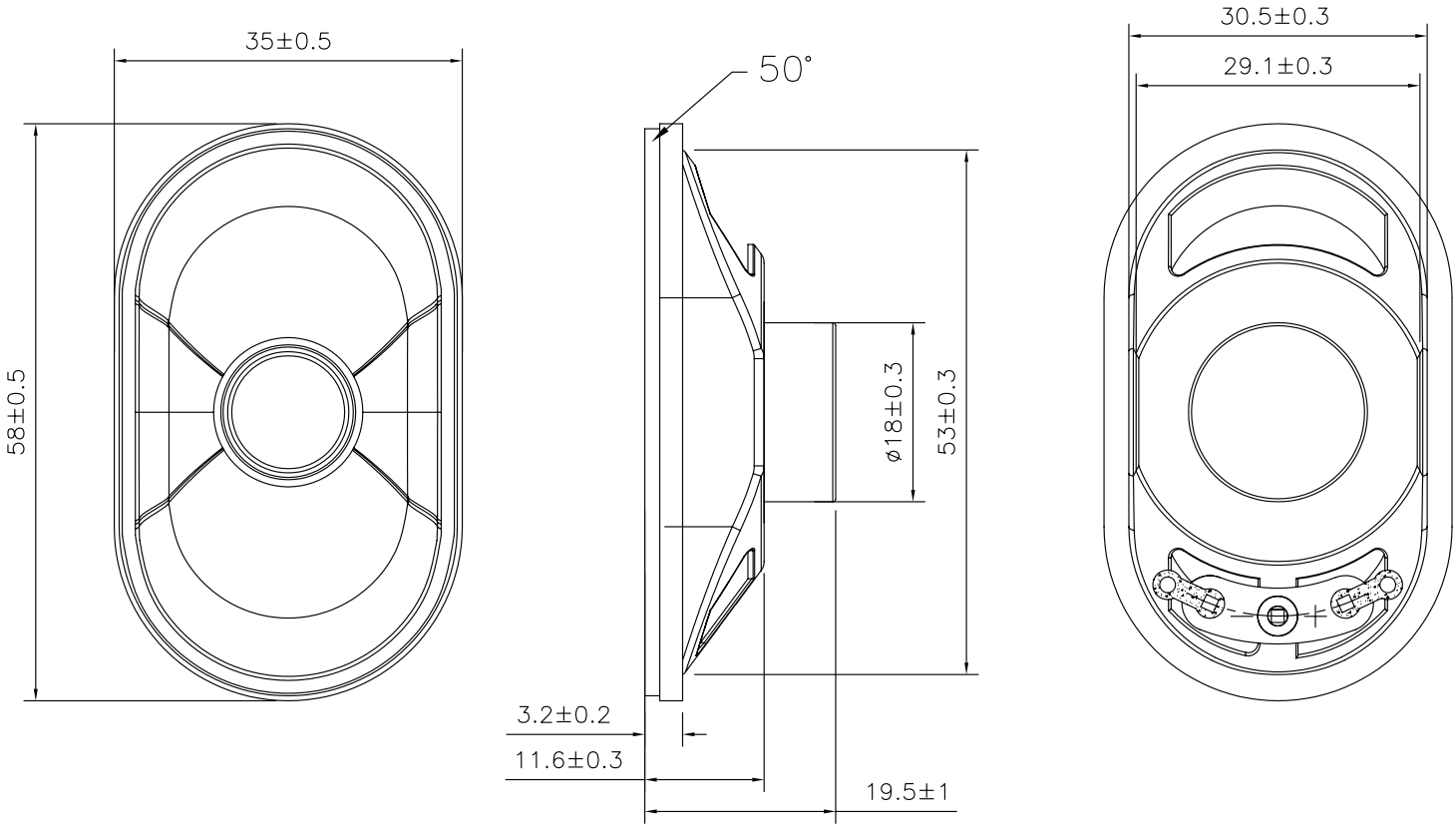

RESPONSE CURVES

Frequency Response Curve

Test Conditions: 2.83 V / 50 cm

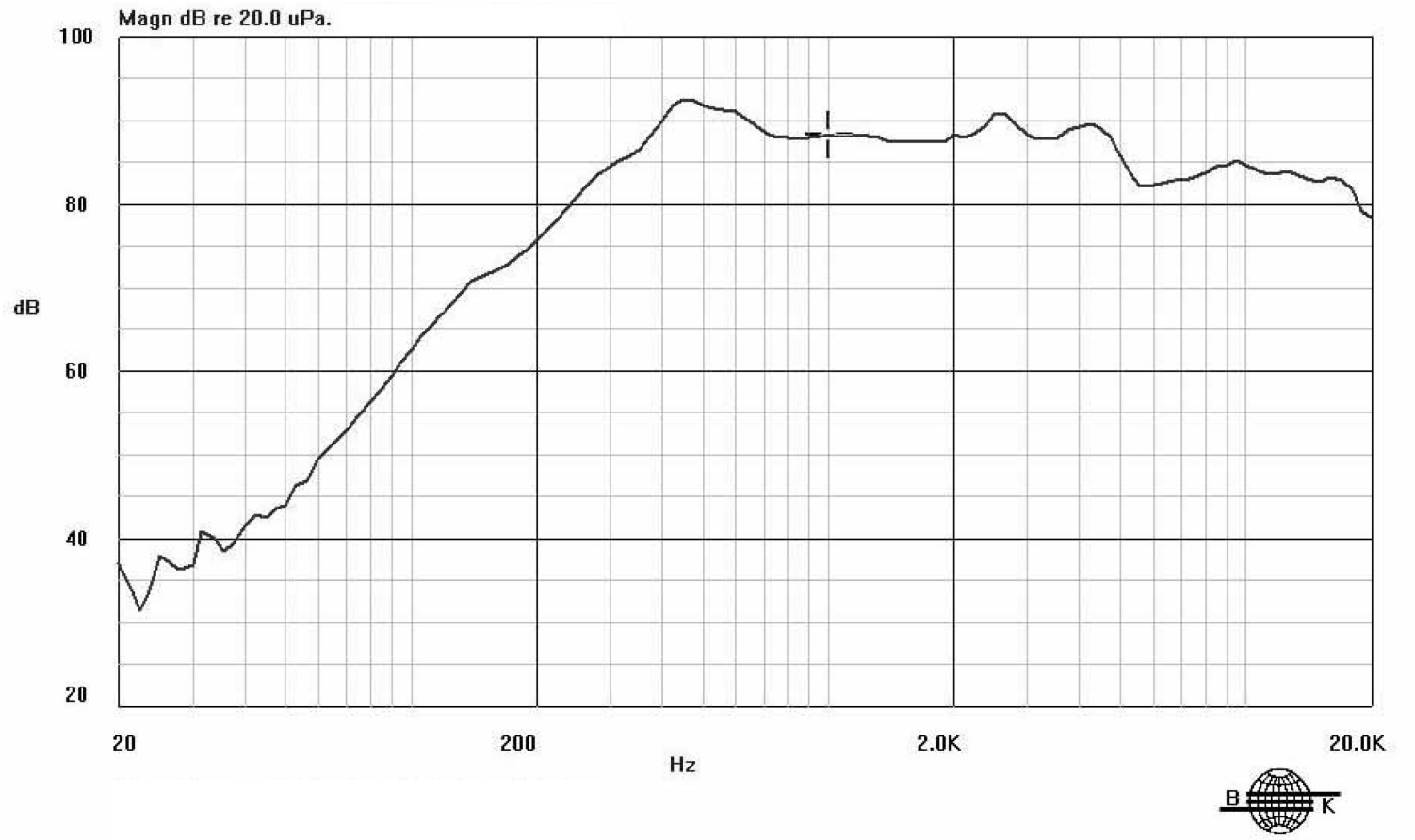

REVISION HISTORY

rev.	description	date
1.0	initial release	07/11/2023

The revision history provided is for informational purposes only and is believed to be accurate.

CUI Devices offers a one (1) year limited warranty. Complete warranty information is listed on our website.

CUI Devices reserves the right to make changes to the product at any time without notice. Information provided by CUI Devices is believed to be accurate and reliable. However, no responsibility is assumed by CUI Devices for its use, nor for any infringements of patents or other rights of third parties which may result from its use.

CUI Devices products are not authorized or warranted for use as critical components in equipment that requires an extremely high level of reliability. A critical component is any component of a life support device or system whose failure to perform can be reasonably expected to cause the failure of the life support device or system, or to affect its safety or effectiveness.

cuidevices.com