CUDEVICES

MODEL: CDSM-6631-48 | **DESCRIPTION:** SPEAKER

FEATURES

- compatible with IEC 60601 applications
- cloth & paper cone
- 110 dB @ 4 W/0.1 m



RoHS

SPECIFICATIONS

parameter	conditions/description	min	typ	max	units
input power	max power: IEC-60268-5, filter 60 s on/120 s off, 10 cycles at room temp		4.0	5.0	W
impedance	at 2.0 kHz, 1.0 V	6.8	8	9.2	Ω
resonant frequency (Fo)	at 1.0 V	160	200	240	Hz
frequency response		Fo		20,000	Hz
sound pressure level	at 4.0 W, 0.1 m, avg at 0.8, 1.0, 1.2, 1.5 kHz	107	110	113	dB
distortion	at 1.0 kHz, rated power			5	%
buzz, rattle, etc.	must be normal at sine wave, frequency range Fo~5 kHz			5.76	V
polarity	cone moves forward w/ positive dc current to "+" terminal				
dimensions	66 x 66 x 31				mm
magnet	Nd-Fe-B				
frame material	SPCC				
cone material	cloth+paper				
terminal	solder eyelets				
weight			204		g
operating temperature		-20		60	°C
storage temperature		-30		70	°C
hand soldering	for maximum 3 seconds	370	380	390	°C
RoHS	yes				

Notes: 1. All specifications measured at 15~35°C, humidity at 45~85%, under 86~106 kPa pressure, unless otherwise noted.

MECHANICAL DRAWING

units: mm
tolerance: ±0.5 mm

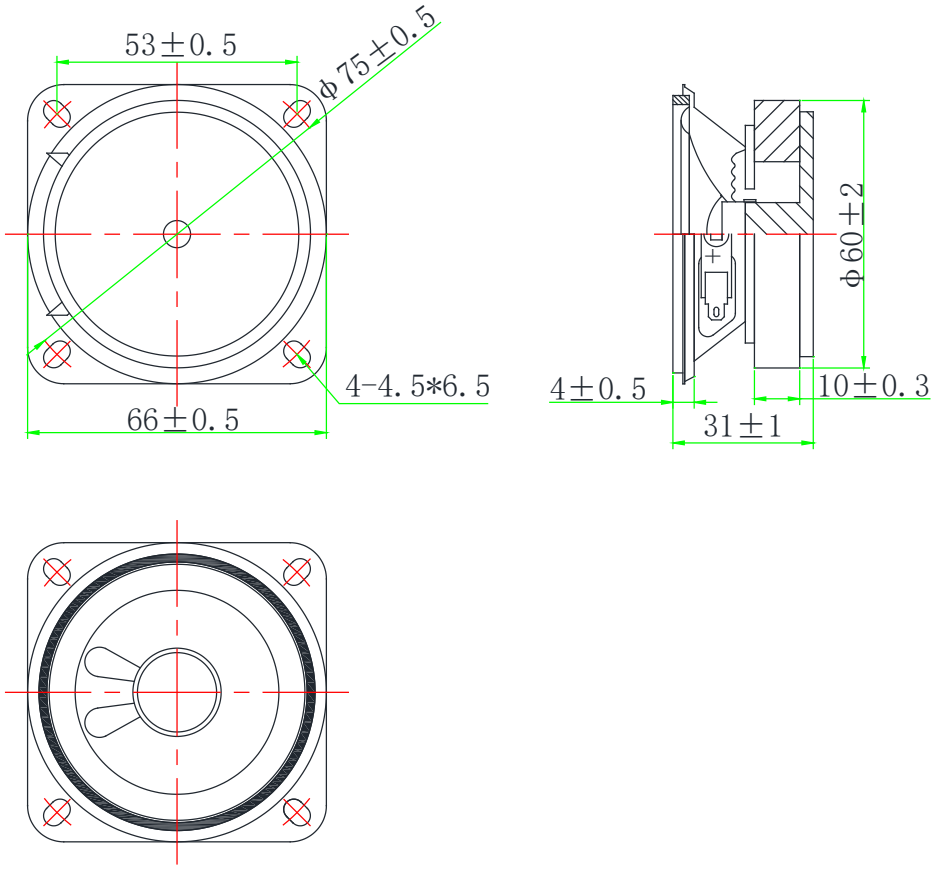

RESPONSE CURVES

Frequency Response Curve

Test Conditions: 4.0 W / 0.1 m

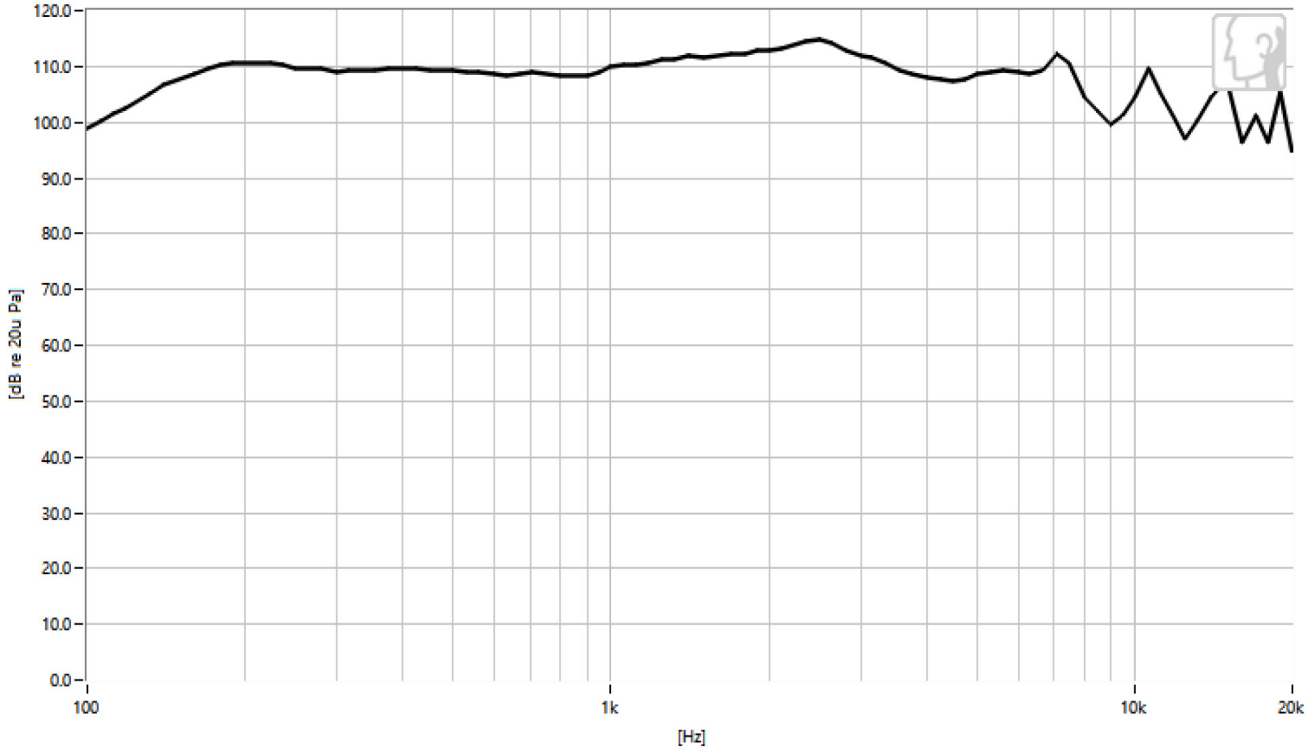

Total Harmonic Distortion Curve

Test Conditions: 4.0 W / 0.1 m

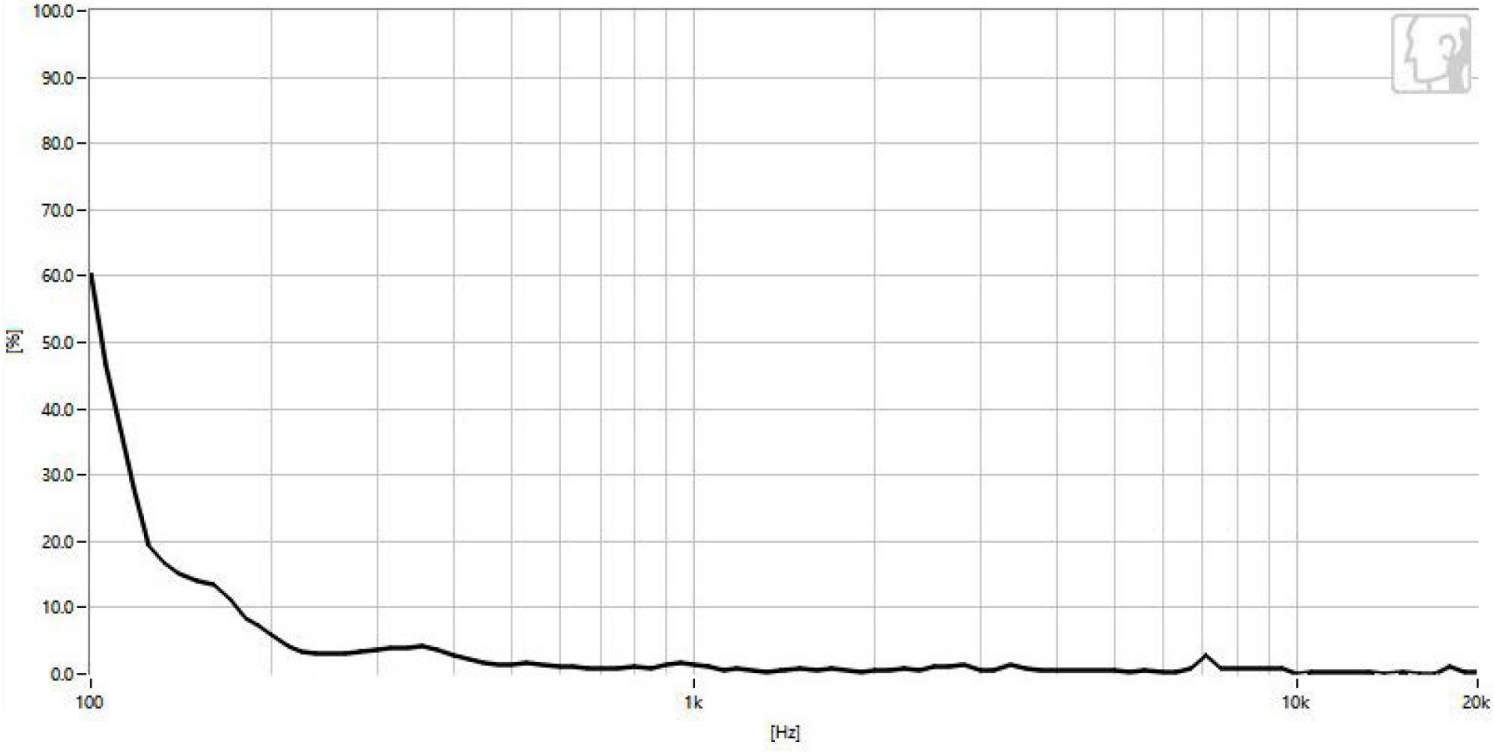

REVISION HISTORY

rev.	description	date
1.0	initial release	01/03/2024

The revision history provided is for informational purposes only and is believed to be accurate.

CUI Devices offers a one (1) year limited warranty. Complete warranty information is listed on our website.

CUI Devices reserves the right to make changes to the product at any time without notice. Information provided by CUI Devices is believed to be accurate and reliable. However, no responsibility is assumed by CUI Devices for its use, nor for any infringements of patents or other rights of third parties which may result from its use.

CUI Devices products are not authorized or warranted for use as critical components in equipment that requires an extremely high level of reliability. A critical component is any component of a life support device or system whose failure to perform can be reasonably expected to cause the failure of the life support device or system, or to affect its safety or effectiveness.

cuidevices.com