CUI Devices is now Same Sky! Learn More



# MODEL: CEP-1114 | DESCRIPTION: PIEZO BUZZER TRANSDUCER

## FEATURES

- piezo transducer with pin mount
- 93 dB SPL
- 2,000 Hz rated frequency



RoHS

## SPECIFICATIONS

| parameter | conditions/description | min | typ | max | units |
|---|---|---|---|---|---|
| operating voltage | | | | 30 | Vp-p |
| current consumption | at 10 Vp-p, 2,000 Hz square wave | | | 11 | mA |
| rated frequency | | | 2,000 | | Hz |
| sound pressure level | at 10 cm, 10 Vp-p, 2,000 Hz square wave | 93 | | | dB |
| electrostatic capacity | at 1 kHz/1 V | 31,500 | 45,000 | 58,500 | pF |
| dimensions | Ø30.0 x 13.5 | | | | mm |
| weight | | | | 4.3 | g |
| material | ABS UL94 1/16" HB (black) | | | | |
| terminal | pin type (Au plating) | | | | |
| operating temperature | | -30 | | 80 | °C |
| storage temperature | | -40 | | 80 | °C |
| RoHS | yes | | | | |

Notes: 1. All specifications measured at 5~35°C, humidity at 45~85%, under 86~106kPa pressure, unless otherwise noted.

## SOLDERABILITY

| parameter | conditions/description | min | typ | max | units |
|---|---|---|---|---|---|
| hand soldering[2] | for maximum 2 seconds | 330 | | 380 | °C |

Notes: 2. Not recommended for wave soldering

## MECHANICAL DRAWING

units: mm
tolerance: ±0.5 mm

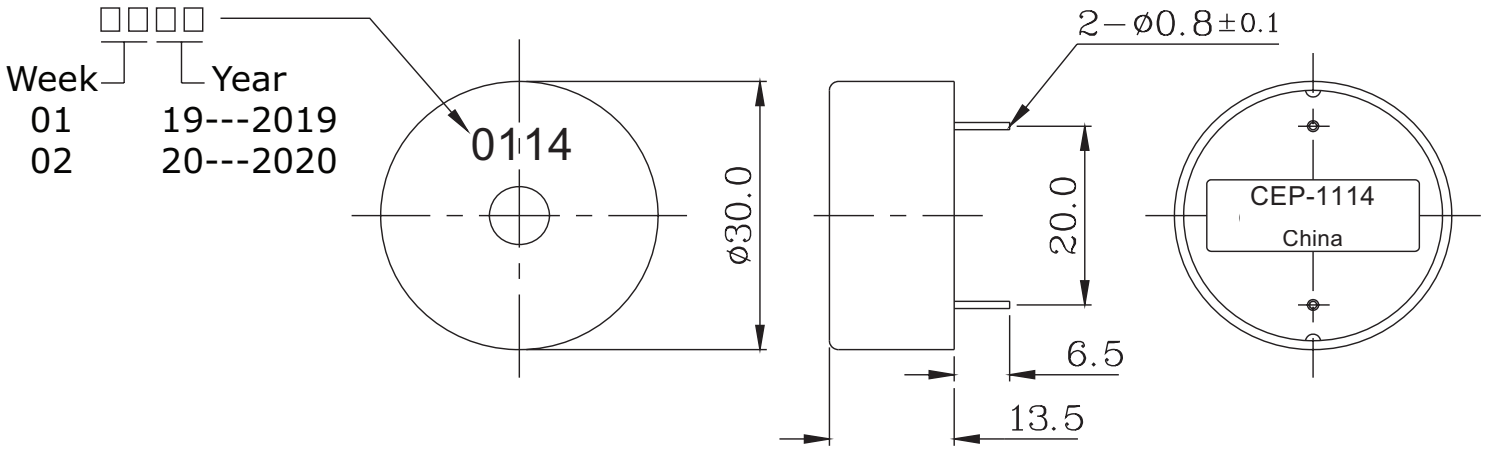


## FREQUENCY RESPONSE CURVE

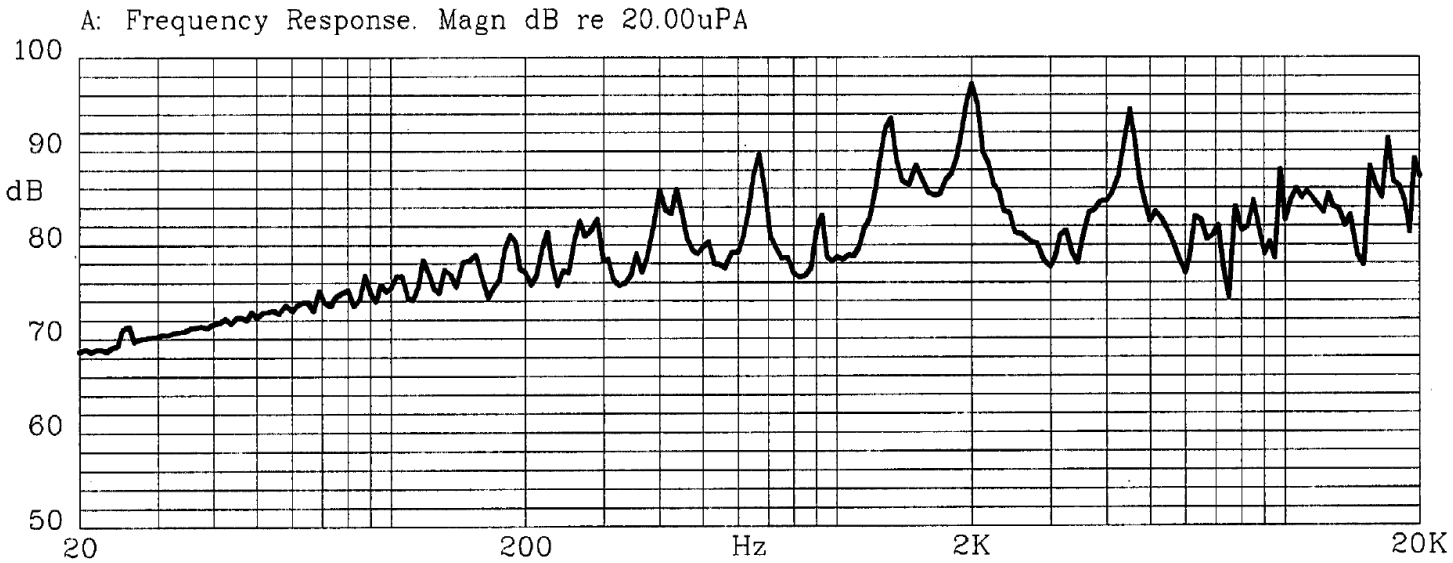

## REVISION HISTORY

| rev. | description | date |
|---|---|---|
| 1.0 | initial release | 10/23/2006 |
| 1.01 | brand update | 03/12/2020 |
| 1.02 | logo, datasheet style update | 08/05/2022 |
| 1.03 | CUI Devices rebranded to Same Sky | 09/11/2024 |

The revision history provided is for informational purposes only and is believed to be accurate.

same sky

Same Sky offers a one (1) year limited warranty. Complete warranty information is listed on our website.

Same Sky reserves the right to make changes to the product at any time without notice. Information provided by Same Sky is believed to be accurate and reliable. However, no responsibility is assumed by Same Sky for its use, nor for any infringements of patents or other rights of third parties which may result from its use.

Same Sky products are not authorized or warranted for use as critical components in equipment that requires an extremely high level of reliability. A critical component is any component of a life support device or system whose failure to perform can be reasonably expected to cause the failure of the life support device or system, or to affect its safety or effectiveness.

**sameskydevices.com**