CUI Devices is now Same Sky! Learn More

MODEL: CEP-1126 | DESCRIPTION: PIEZO BUZZER TRANSDUCER

FEATURES

- piezo transducer with wire leads
- 92 dB SPL
- 2,800 Hz rated frequency



RoHS

SPECIFICATIONS

parameter	conditions/description	min	typ	max	units
operating voltage				30	Vp-p
current consumption	at 10 Vp-p, 2,800 Hz square wave			10	mA
rated frequency			2,800		Hz
sound pressure level	at 10 cm, 10 Vp-p, 2,800 Hz square wave	92			dB
electrostatic capacity	at 1 kHz/1 V	12,600	18,000	23,400	pF
dimensions	Ø29.5 x 5.2				mm
weight				5.6	g
material	ABS UL94 1/16" HB High Heat (black)				
terminal	wire leads				
operating temperature		-30		85	°C
storage temperature		-40		95	°C
RoHS	yes				

Notes: 1. All specifications measured at 5~35°C, humidity at 45~85%, under 86~106kPa pressure, unless otherwise noted.

SOLDERABILITY

parameter	conditions/description	min	typ	max	units
hand soldering	for 2 ± 0.5 seconds	280	290	300	°C

MECHANICAL DRAWING

units: mm
tolerance: ±0.5 mm

wire: UL1571 32 AWG

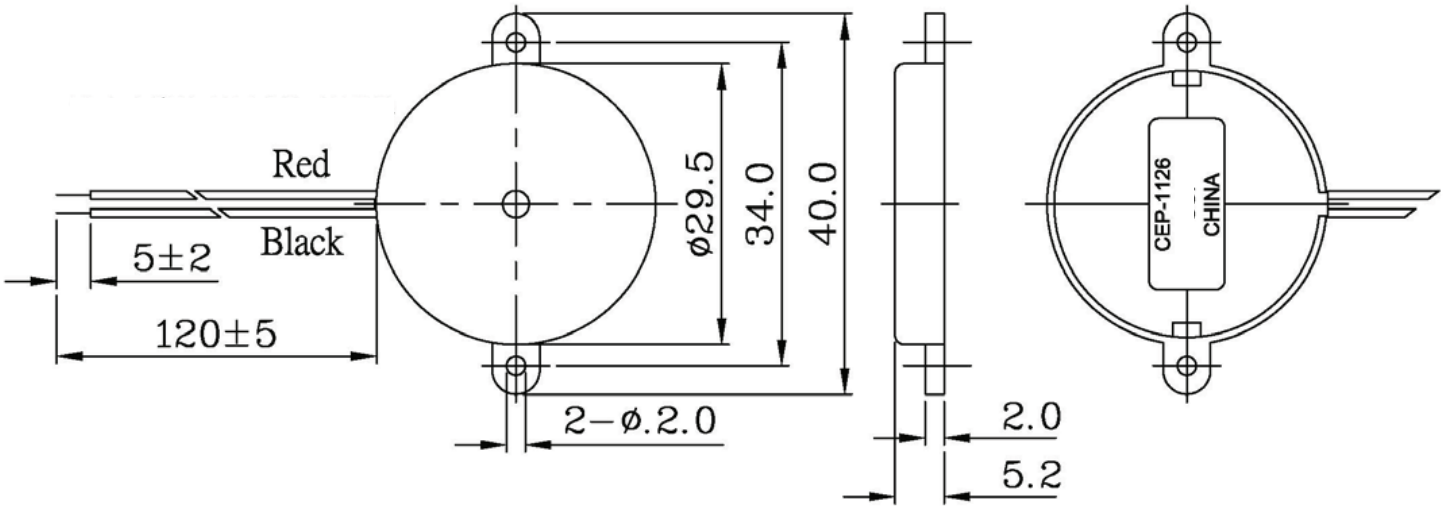

FREQUENCY RESPONSE CURVE

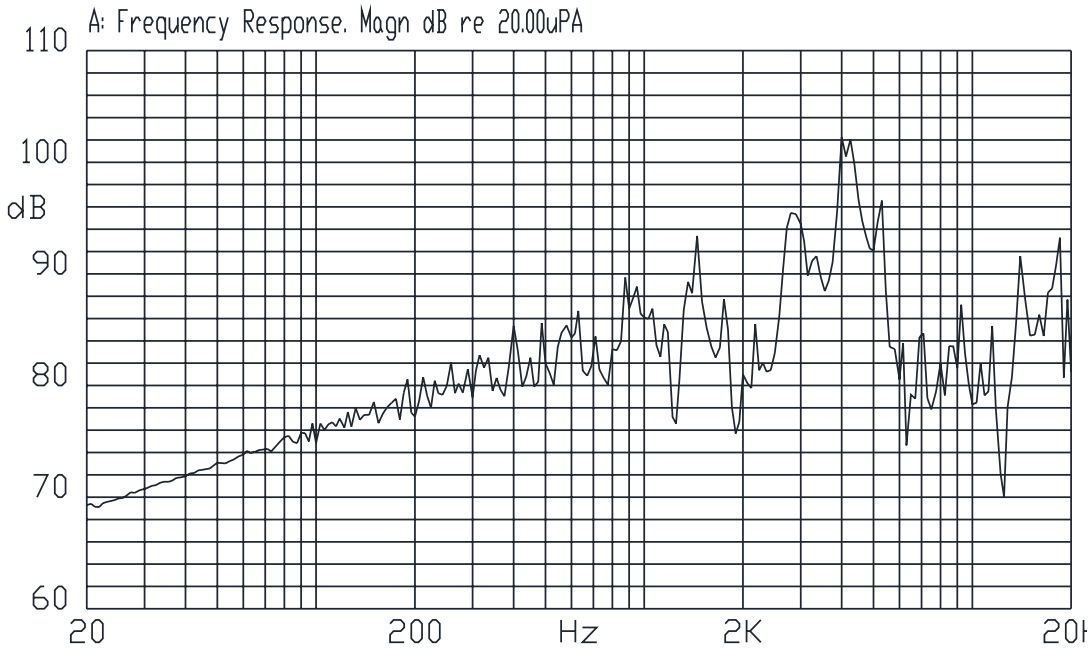

REVISION HISTORY

rev.	description	date
1.0	initial release	09/25/2006
1.01	brand update	04/28/2020
1.02	logo, datasheet style update	08/05/2022
1.03	CUI Devices rebranded to Same Sky	09/11/2024

The revision history provided is for informational purposes only and is believed to be accurate.

same sky

Same Sky offers a one (1) year limited warranty. Complete warranty information is listed on our website.

Same Sky reserves the right to make changes to the product at any time without notice. Information provided by Same Sky is believed to be accurate and reliable. However, no responsibility is assumed by Same Sky for its use, nor for any infringements of patents or other rights of third parties which may result from its use.

Same Sky products are not authorized or warranted for use as critical components in equipment that requires an extremely high level of reliability. A critical component is any component of a life support device or system whose failure to perform can be reasonably expected to cause the failure of the life support device or system, or to affect its safety or effectiveness.

sameskydevices.com