CUDEVICES

MODEL: CES-231210-18PM | **DESCRIPTION:** SPEAKER

FEATURES

- 8 ohm rated impedance
- 1.0 W rated power
- panel mount



RoHS

SPECIFICATIONS

parameter	conditions/description	min	typ	max	units
input power	max power: IEC-60268-5, filter 60 seconds on, 120 seconds off, 10 cycles (room temp)		1.0	1.5	W
impedance	at 2.0 kHz	6.8	8	9.2	Ω
resonant frequency (Fo)		680	850	1,020	Hz
frequency response		Fo		20,000	Hz
sound pressure level	at 1.0 W, 10 cm, avg at 2.0 kHz	89	92	95	dB
distortion	at 1.0 kHz, 1.0 W			10	%
buzz, rattle, etc.	must be normal at sine wave, frequency range			2.83	V
polarity	cone moves forward w/ positive dc current to "+" terminal				
dimensions	24.0 x 13.0 x 11.0				mm
magnet	Nd-Fe-B				
frame material	ABS				
cone material	PEEK				
terminal	wire leads with connector				
weight			3.1		g
operating temperature		-20		60	°C
storage temperature		-30		70	°C
RoHS	yes				

Notes: 1. All specifications measured at 15~35°C, humidity at 45~85%, under 86~106 kPa pressure, unless otherwise noted.

MECHANICAL DRAWING

units: mm
tolerance: ±0.3 mm

wire: UL1571 30 AWG
internal speaker: CMS-20103-078SP
connector: Molex 51021-0200 or equivalent; P=1.25

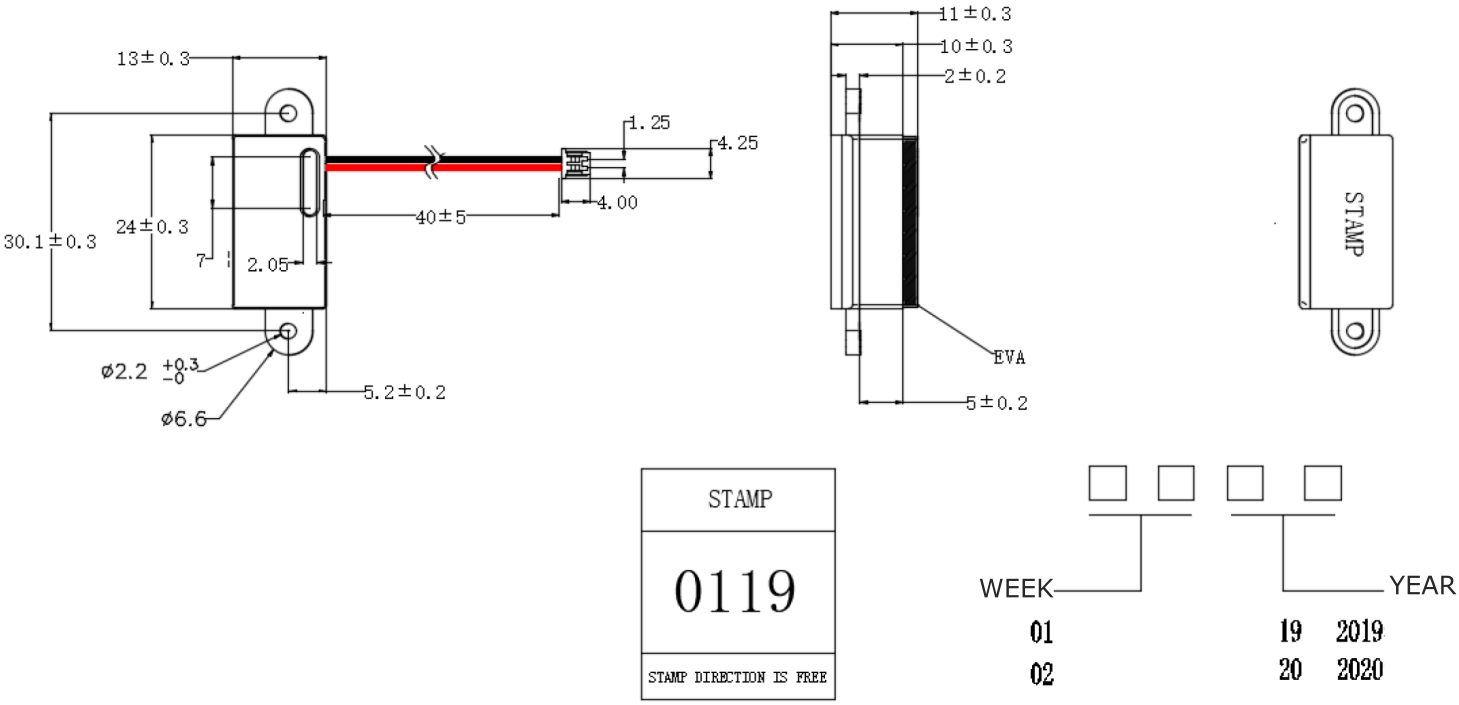

RESPONSE CURVES

Frequency Response Curve

Test Conditions: 1.0 W / 10 cm

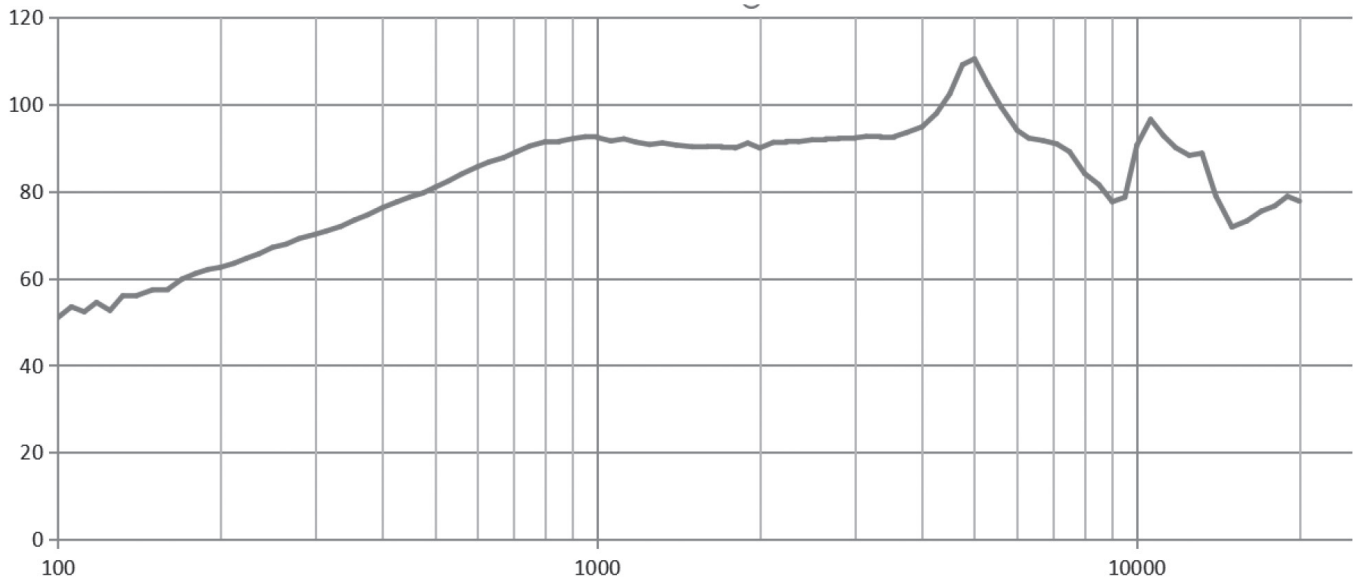

Total Harmonic Distortion Curve

Test Conditions: 1.0 W / 10 cm

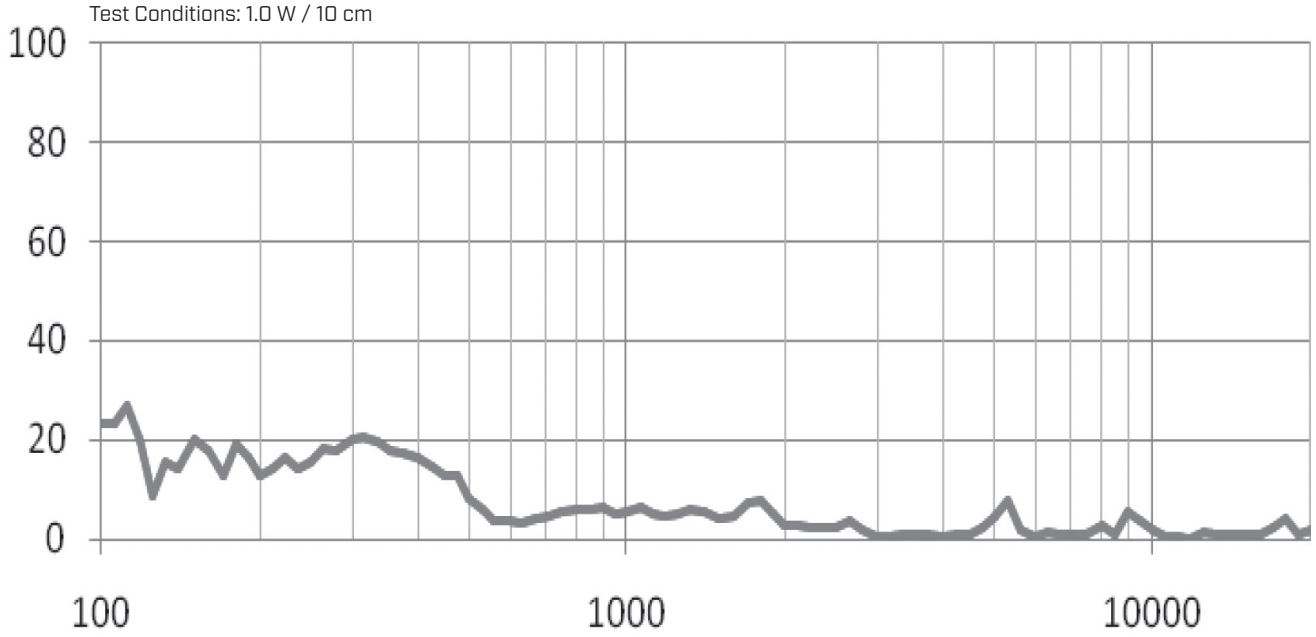

PACKAGING

units: mm

Tray Size: 290 x 220 mm
Tray QTY: 100 pcs per tray
Carton Size: 310 x 240 x 270 mm
Carton QTY: 2,500 pcs per carton

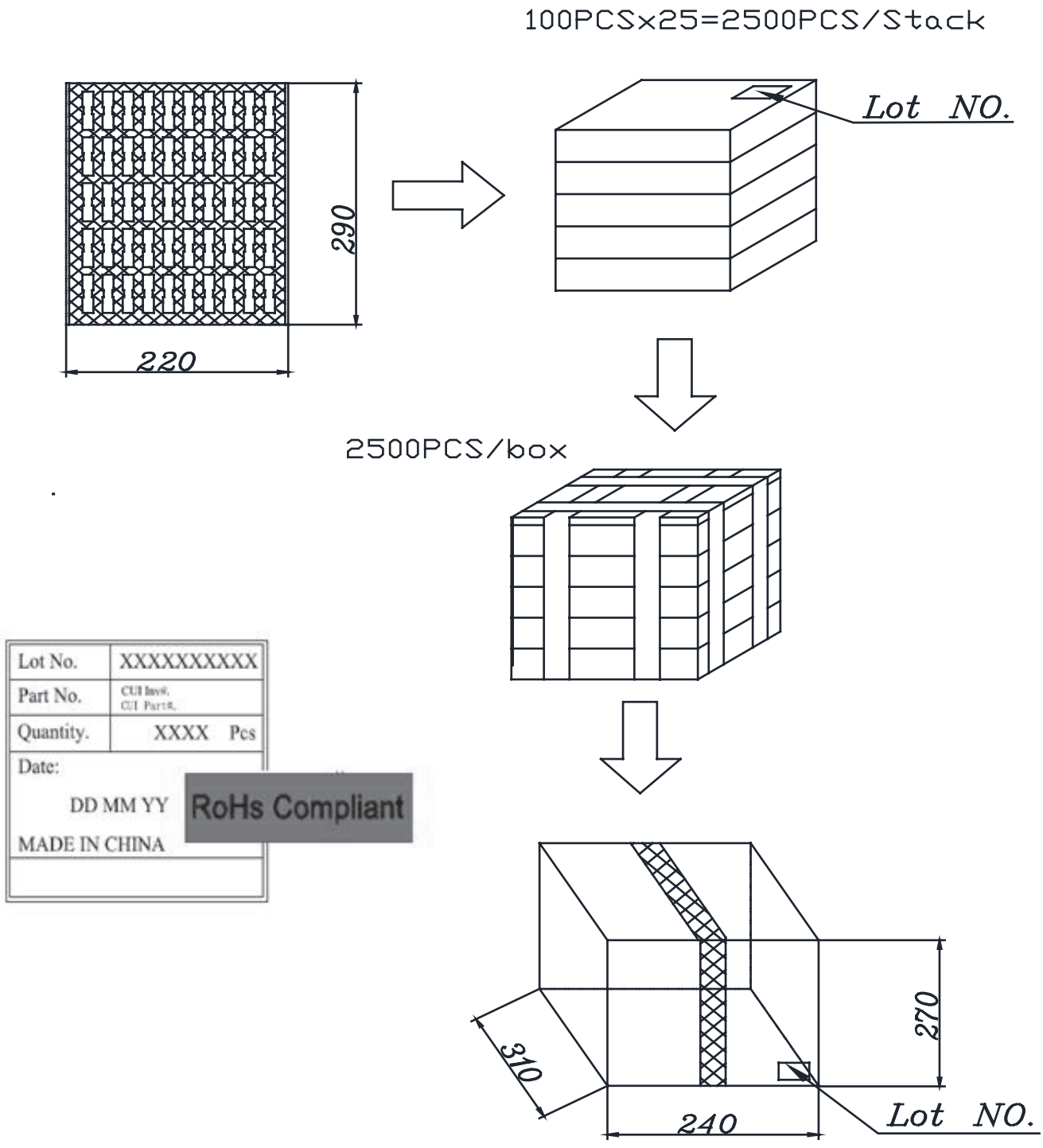

REVISION HISTORY

rev.	description	date
1.0	initial release	06/08/2020
1.01	logo, datasheet style update	08/05/2022

The revision history provided is for informational purposes only and is believed to be accurate.

CUI Devices offers a one (1) year limited warranty. Complete warranty information is listed on our website.

CUI Devices reserves the right to make changes to the product at any time without notice. Information provided by CUI Devices is believed to be accurate and reliable. However, no responsibility is assumed by CUI Devices for its use, nor for any infringements of patents or other rights of third parties which may result from its use.

CUI Devices products are not authorized or warranted for use as critical components in equipment that requires an extremely high level of reliability. A critical component is any component of a life support device or system whose failure to perform can be reasonably expected to cause the failure of the life support device or system, or to affect its safety or effectiveness.

cuidevices.com