MODEL: CES-26138-16L030 | DESCRIPTION: SPEAKER

FEATURES

- 1.2 W rated power
- 6 ohm rated impedance
- 30 mm lead wire

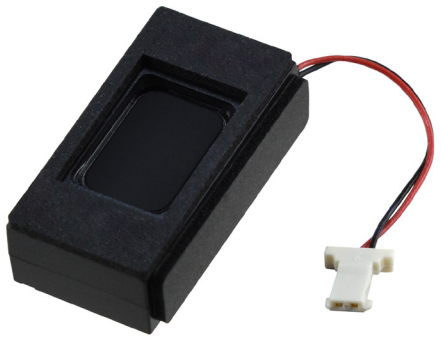

RoHS

SPECIFICATIONS

parameter	conditions/description	min	typ	max	units
input power	max power: 1 second on, 59 seconds off, 60 cycles		1.2	1.5	W
impedance	at 2.0 kHz, 2.68 Vrms	4.8	6.0	7.2	Ω
resonant frequency (Fo)	at 2.68 Vrms, 10 cm	800	1,000	1,200	Hz
frequency response	as per IEC 268-5	500		20,000	Hz
sound pressure level	at 1.2 W, 10 cm, avg at 2.0 kHz in free air	92	95	98	dB
distortion	at 2.0 kHz, rated power, 10 cm			10	%
buzz, rattle, etc.	must be normal at sine wave, frequency range			2.68	V
polarity	cone moves forward w/ positive dc current to “+” terminal				
dimensions	26 x 13 x 7				mm
magnet	Nd-Fe-B				
enclosure material	PC+ABS				
cone material	PEEK				
terminal	wire leads w/ connector				
weight		2.5	3.0	3.5	g
operating temperature		-20		70	°C
storage temperature		-40		85	°C
RoHS	yes				

Notes: 1. All specifications measured at 15~35°C, humidity at 25~75%, under 86~106 kPa pressure, unless otherwise noted.

MECHANICAL DRAWING

units: mm
tolerance: ±0.2 mm

wire: UL1571 32 AWG
internal speaker: CMS-151103-16SP
connector: Aces Electronics 50280-002H0H1-001
crimp terminal: Aces Electronics 88232-T

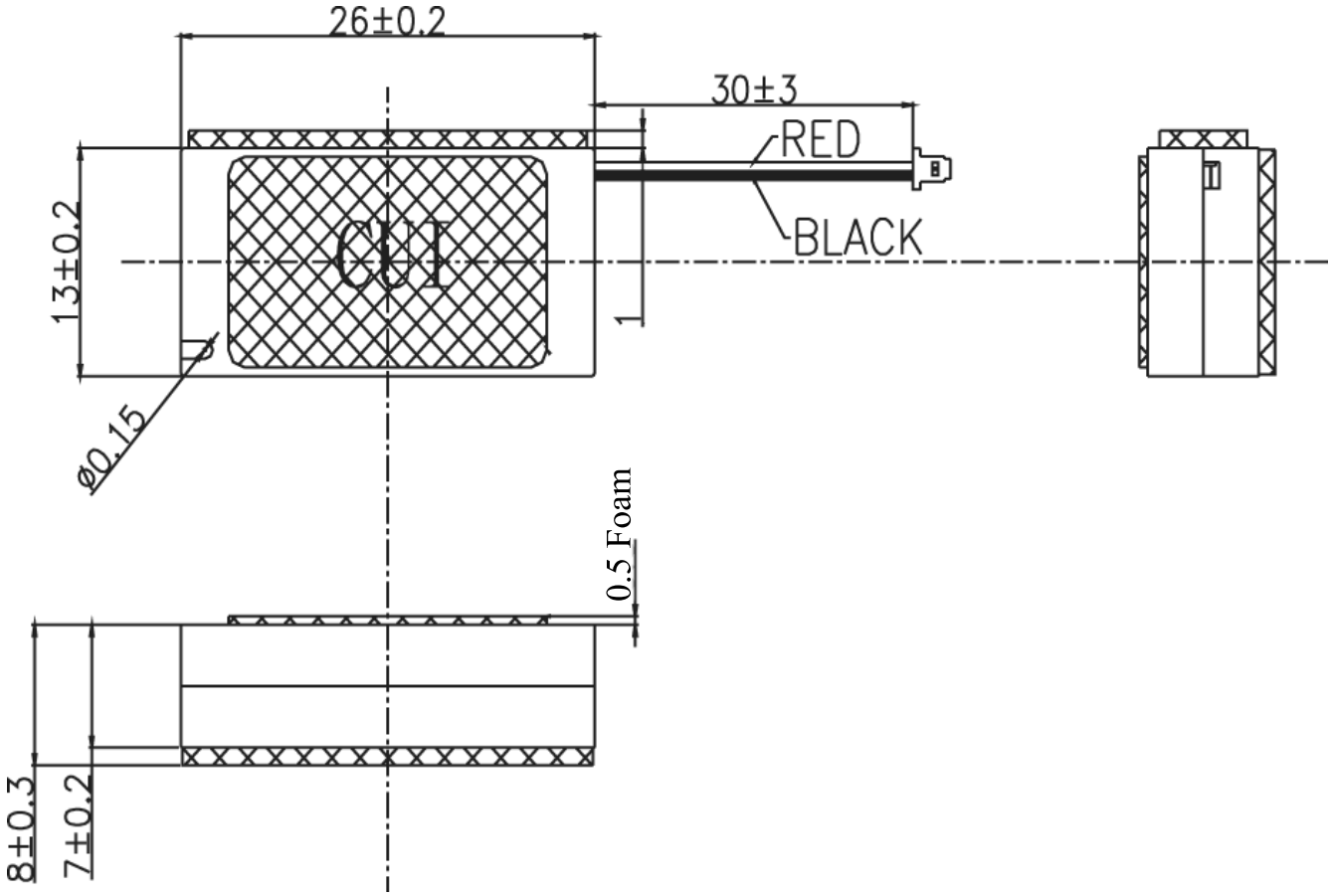

RESPONSE CURVES

Frequency Response Curve

Test Conditions: 2.68 Vrms / 10 cm

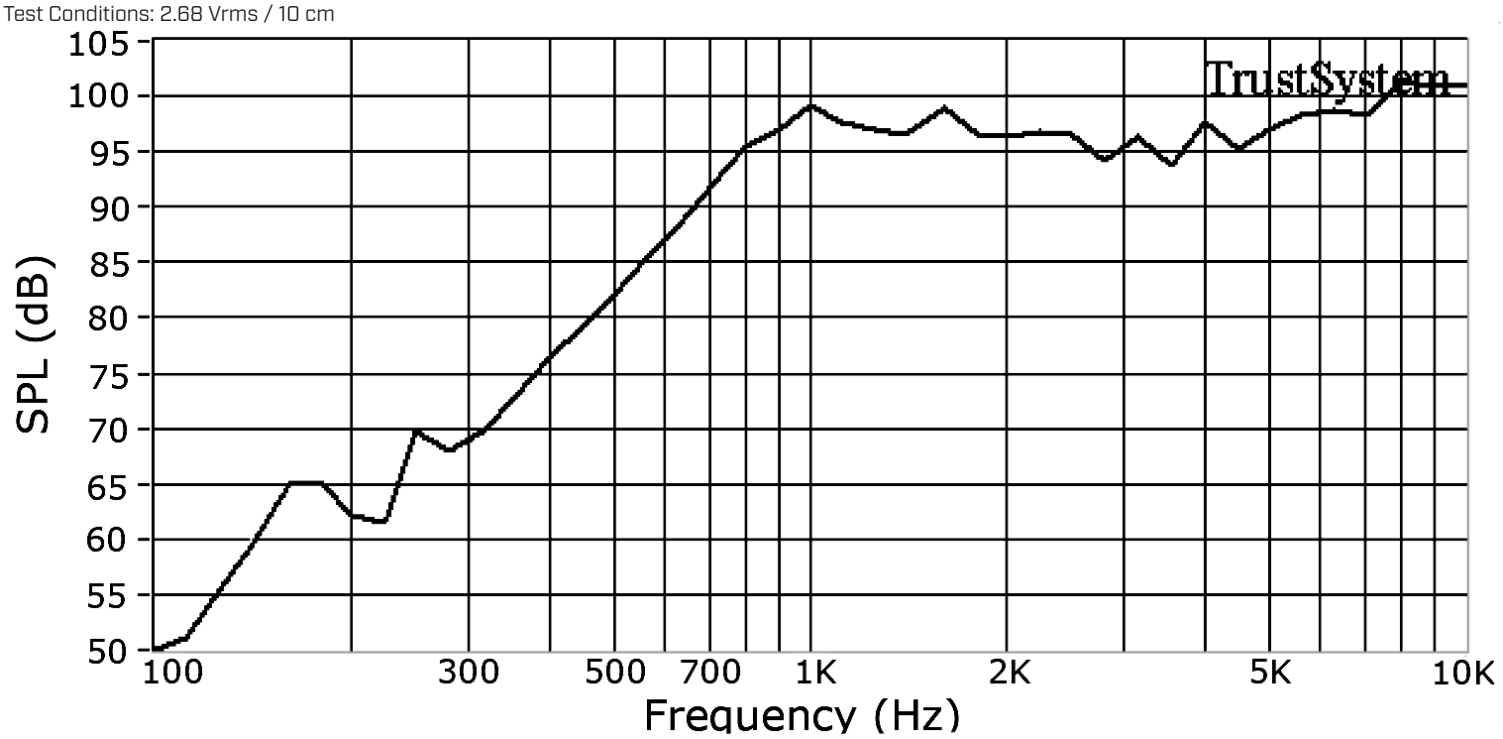

Total Harmonic Distortion Curve

Test Conditions: 2.68 Vrms / 10 cm

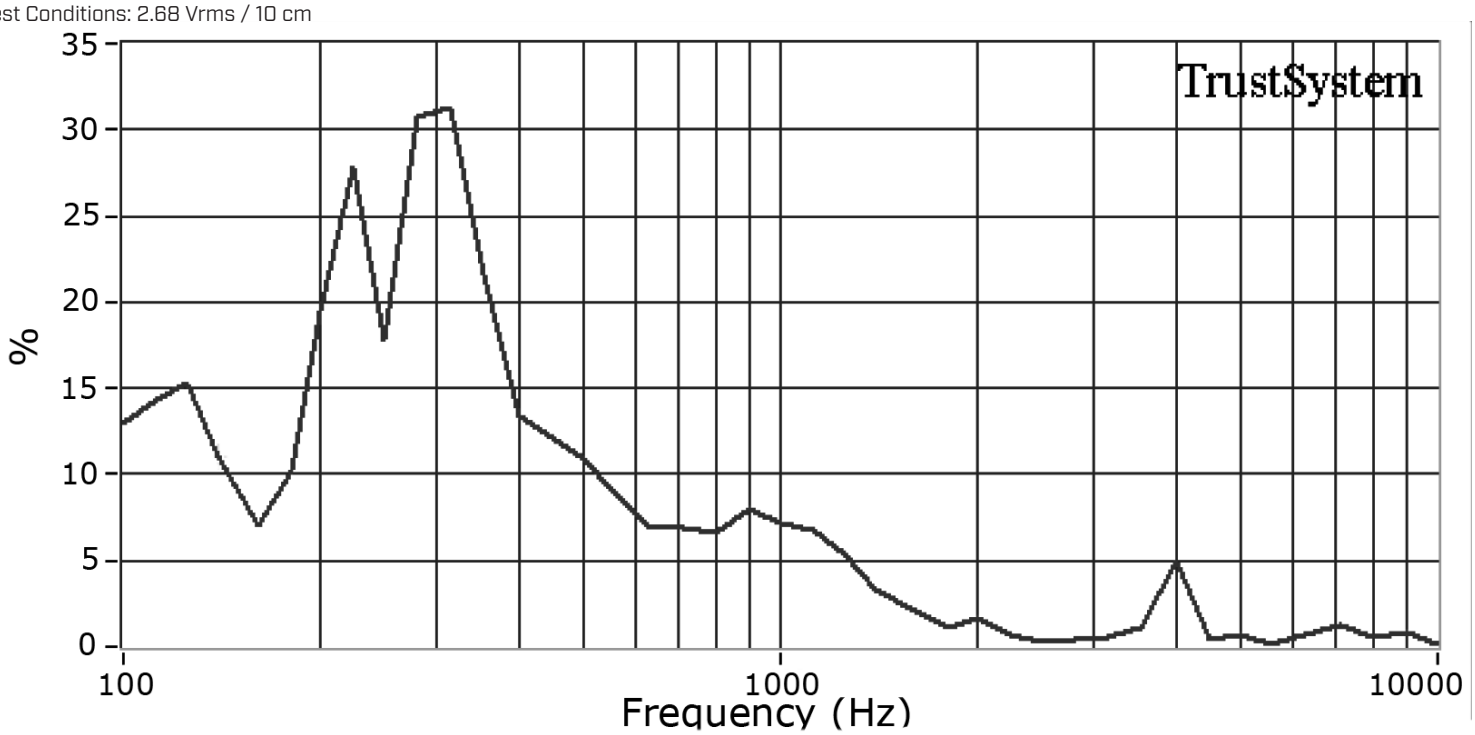

PACKAGING

units: mm

Tray QTY: 70 pcs per tray
Carton Size: 480 x 350 x 450 mm
Carton QTY: 1,820 pcs per carton

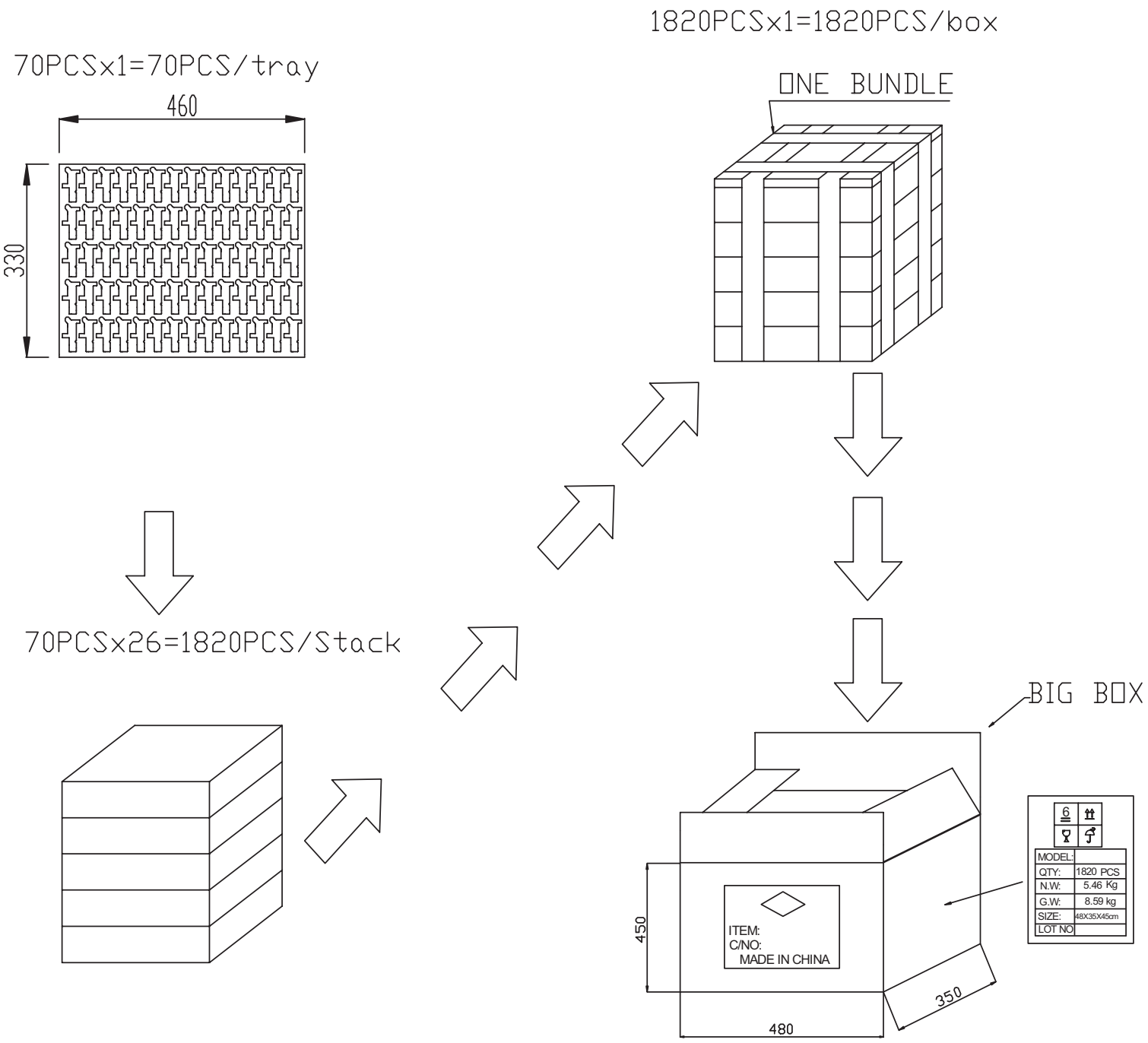

REVISION HISTORY

rev.	description	date
1.0	initial release	11/06/2019
1.01	added connector detail	02/05/2020
1.02	added internal speaker details	03/12/2020
1.03	logo, datasheet style update	08/05/2022

The revision history provided is for informational purposes only and is believed to be accurate.

CUI Devices offers a one (1) year limited warranty. Complete warranty information is listed on our website.

CUI Devices reserves the right to make changes to the product at any time without notice. Information provided by CUI Devices is believed to be accurate and reliable. However, no responsibility is assumed by CUI Devices for its use, nor for any infringements of patents or other rights of third parties which may result from its use.

CUI Devices products are not authorized or warranted for use as critical components in equipment that requires an extremely high level of reliability. A critical component is any component of a life support device or system whose failure to perform can be reasonably expected to cause the failure of the life support device or system, or to affect its safety or effectiveness.

cuidevices.com