CUDEVICES

MODEL: CES-603318-24PM | **DESCRIPTION:** SPEAKER

FEATURES

- cloth gasket
- 2 mounting flanges
- 65 mm lead wire
- connector



RoHS

SPECIFICATIONS

parameter	conditions/description	min	typ	max	units
input power	max power: 1 minute on, 2 minutes off, 10 cycles		2.0	4.0	W
impedance	at 1.0 kHz, 1.0 Vrms	3.4	4	4.6	Ω
resonant frequency (Fo)	at 1.0 Vrms, 10 cm	640	800	960	Hz
frequency response	as per IEC 268-5	200		20,000	Hz
sound pressure level	at 2.0 W, 10 cm, avg at 1.0, 1.2, 1.5, 1.8 kHz	101	104	107	dB
distortion	at 1.0 kHz, 1.0 Vrms, 10 cm			5	%
buzz, rattle, etc.	must be normal at sine wave, frequency range			2.83	V
polarity	cone moves forward w/ positive dc current to “+” terminal				
dimensions	60 x 33.0 x 17.8				mm
magnet	Nd-Fe-B				
enclosure material	ABS				
cone material	Cloth				
terminal	wire leads w/ connector				
weight			27		g
operating temperature		-20		60	°C
storage temperature		-30		70	°C
RoHS	yes				
IP level	IP66 (front side)				

Notes: 1. All specifications measured at 15~35°C, humidity at 25~75%, under 86~106 kPa pressure, unless otherwise noted.

MECHANICAL DRAWING

units: mm
tolerance: ±0.5 mm

wire: UL1571 28 AWG
internal speaker: CMS-402811-28SP
connector: JST GHR-02V-S-B

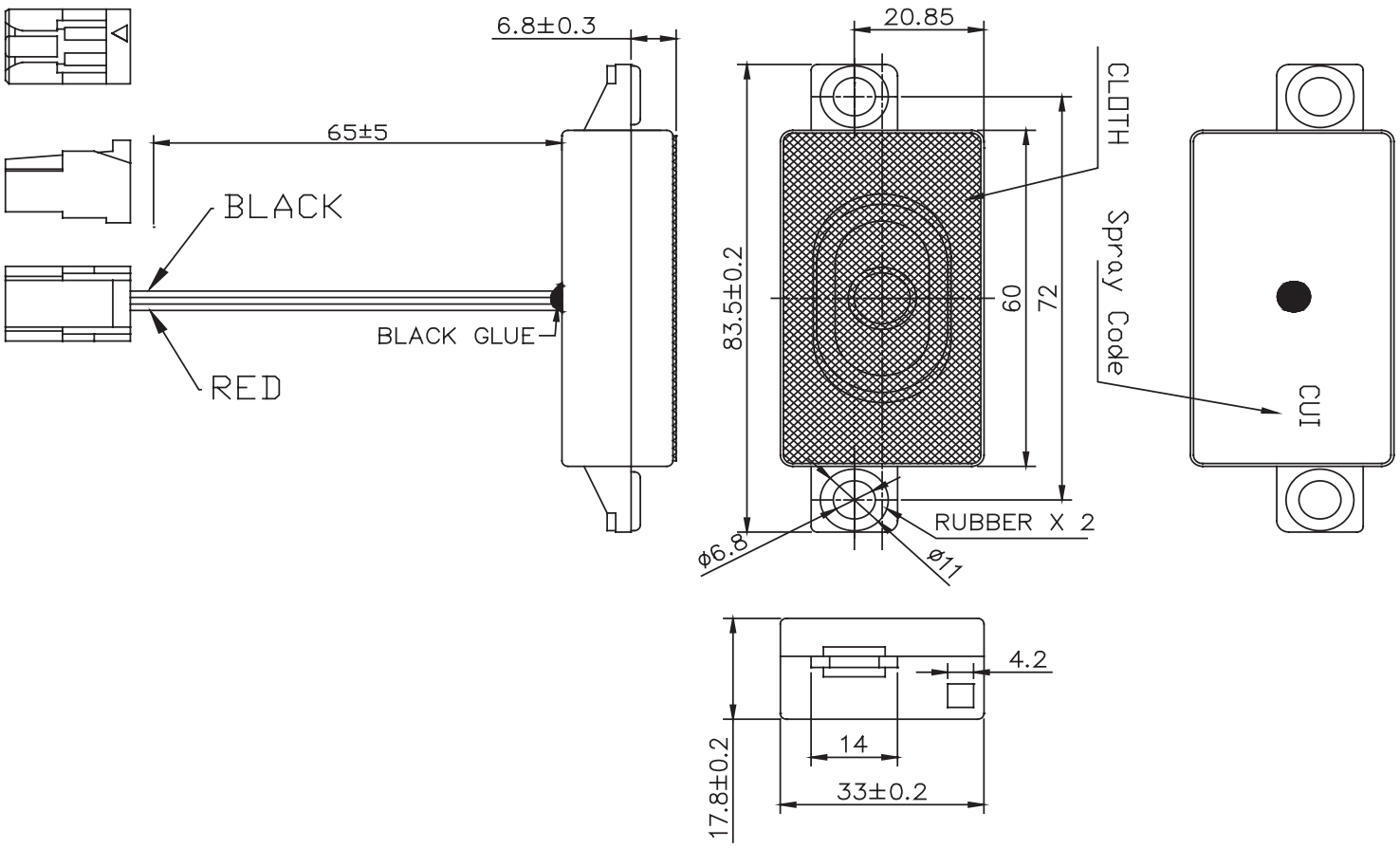

RESPONSE CURVES

Frequency Response Curve

Test Conditions: 2.83 Vrms / 10 cm

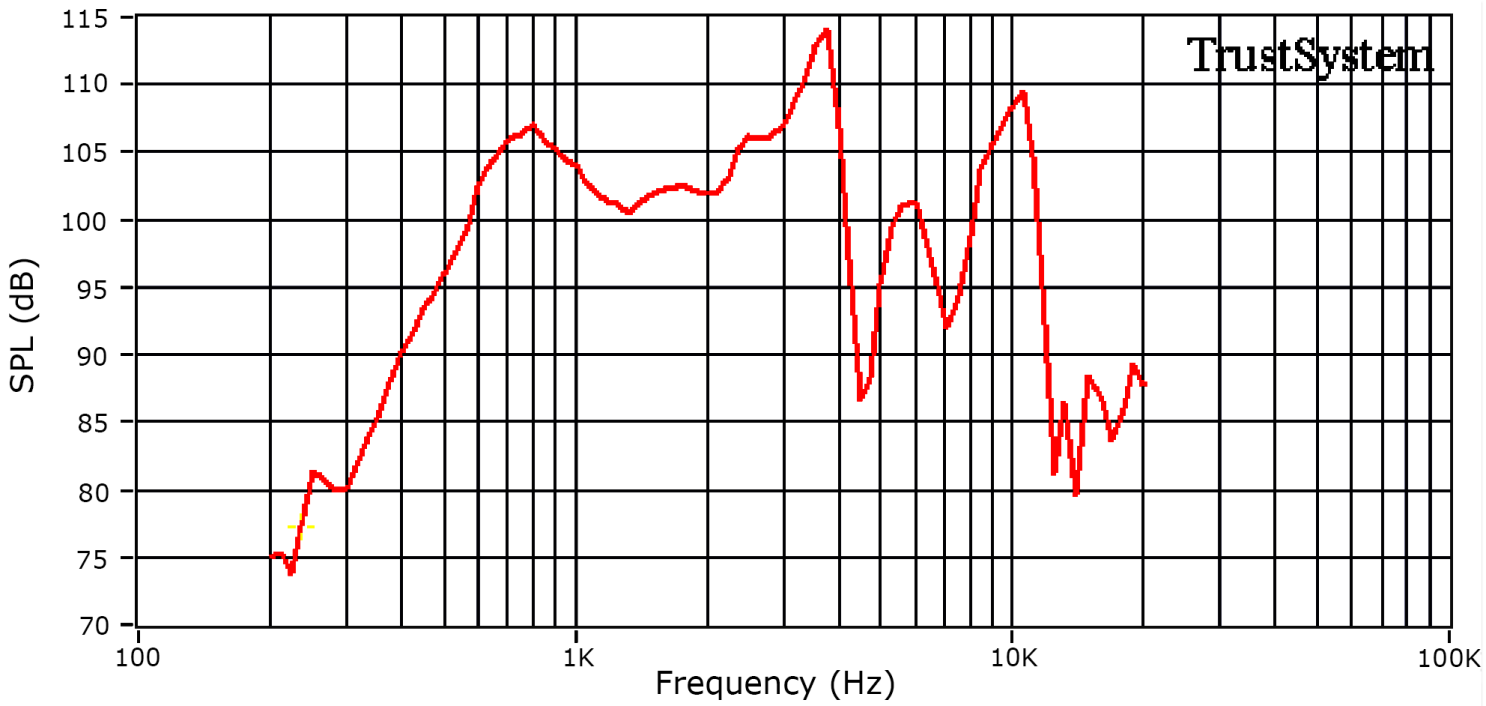

Total Harmonic Distortion Curve

Test Conditions: 2.83 Vrms / 10 cm

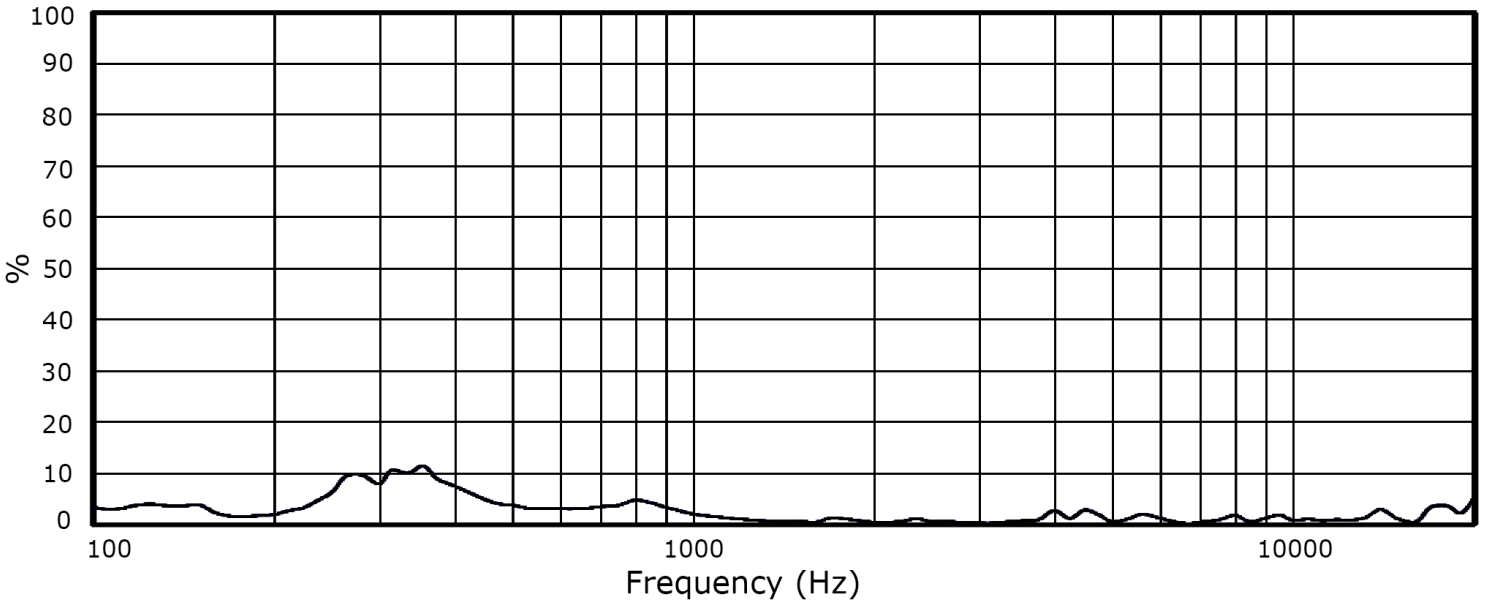

PACKAGING

units: mm

Tray QTY: 80 pcs per tray (40 sets per box)
Carton Size: 595 x 510 x 220 mm
Carton QTY: 320 pcs per carton

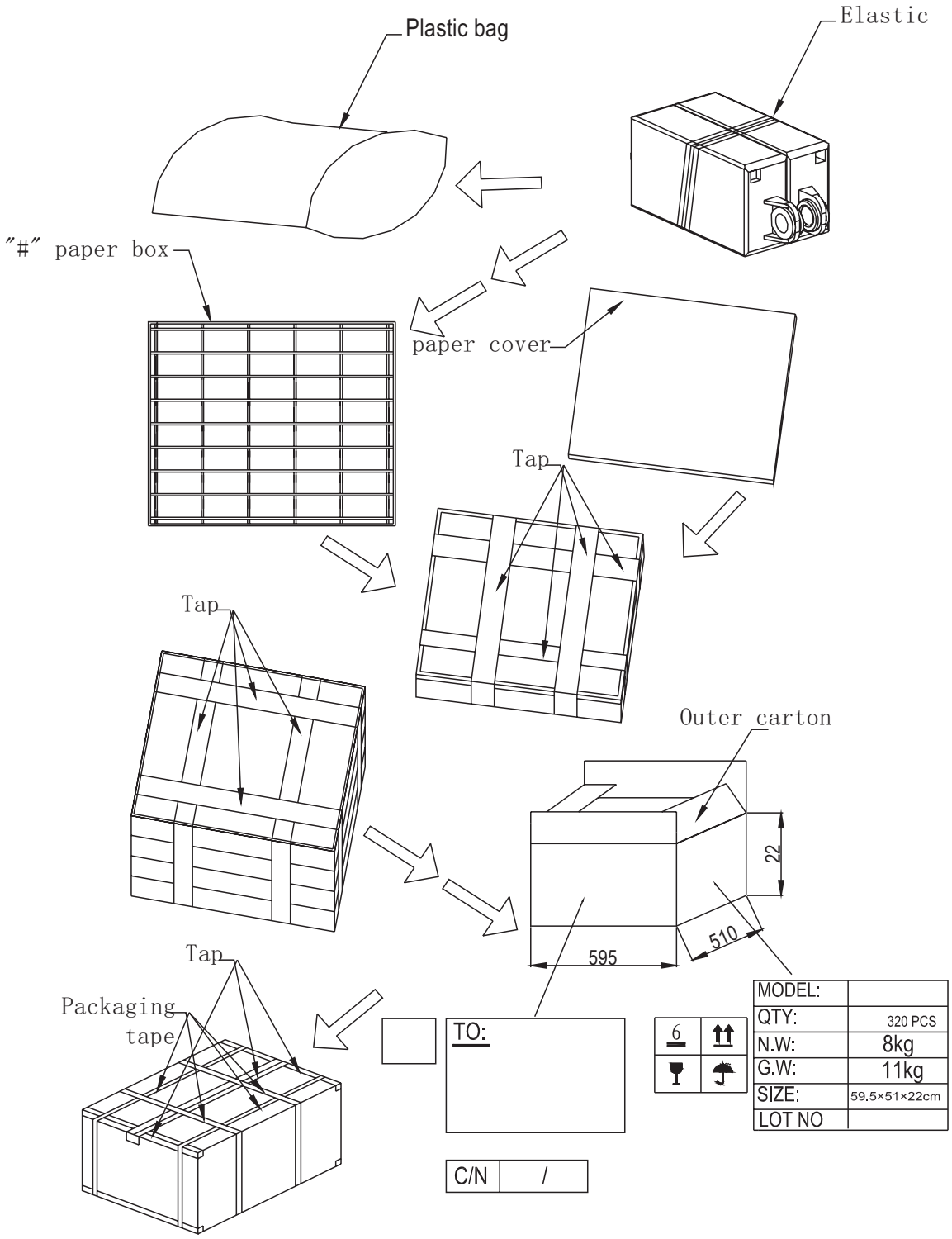

REVISION HISTORY

rev.	description	date
1.0	initial release	11/05/2019
1.01	added internal speaker details	03/12/2020
1.02	updated datasheet	04/06/2022
1.03	logo, datasheet style update	08/05/2022

The revision history provided is for informational purposes only and is believed to be accurate.

CUI Devices offers a one (1) year limited warranty. Complete warranty information is listed on our website.

CUI Devices reserves the right to make changes to the product at any time without notice. Information provided by CUI Devices is believed to be accurate and reliable. However, no responsibility is assumed by CUI Devices for its use, nor for any infringements of patents or other rights of third parties which may result from its use.

CUI Devices products are not authorized or warranted for use as critical components in equipment that requires an extremely high level of reliability. A critical component is any component of a life support device or system whose failure to perform can be reasonably expected to cause the failure of the life support device or system, or to affect its safety or effectiveness.

cuidevices.com