MODEL: CES-703116-28PM | DESCRIPTION: SPEAKER

FEATURES

- cloth and paper cones
- 4 screw holes for mounting
- 420 mm lead wire
- connector



RoHS

SPECIFICATIONS

parameter	conditions/description	min	typ	max	units
input power	max power: 1 minute on, 2 minutes off, 10 cycles		2.0	3.0	W
impedance	at 1.0 kHz, 0.89 Vrms	6.8	8.0	9.2	Ω
resonant frequency (Fo)	at 0.89 Vrms	568	710	852	Hz
frequency response		Fo		20,000	Hz
sound pressure level	at 2 W, 10 cm, avg at 0.8, 1.0, 1.18, 1.5 kHz	99	102	105	dB
distortion	at 2.0 kHz, rated power, 10 cm			10	%
buzz, rattle, etc.	must be normal at sine wave, 200~20,000 Hz			4.0	V
polarity	cone moves forward w/ positive dc current to “+” terminal				
dimensions	70 x 31 x 16.5				mm
magnet	Nd-Fe-B				
enclosure material	ABS				
cone material	paper + cloth				
terminal	wire leads w/ connector				
weight			21		g
operating temperature		-20		60	°C
storage temperature		-30		70	°C
RoHS	yes				

Notes: 1. All specifications measured at 15~35°C, humidity at 45~85%, under 86~106 kPa pressure, unless otherwise noted.

MECHANICAL DRAWING

units: mm
tolerance: ±0.5 mm

wire: UL1007 26 AWG
internal speaker: CMS-402811-28SP
connector: JST PHR-2
terminal: JST SPH-002T-P0.5S

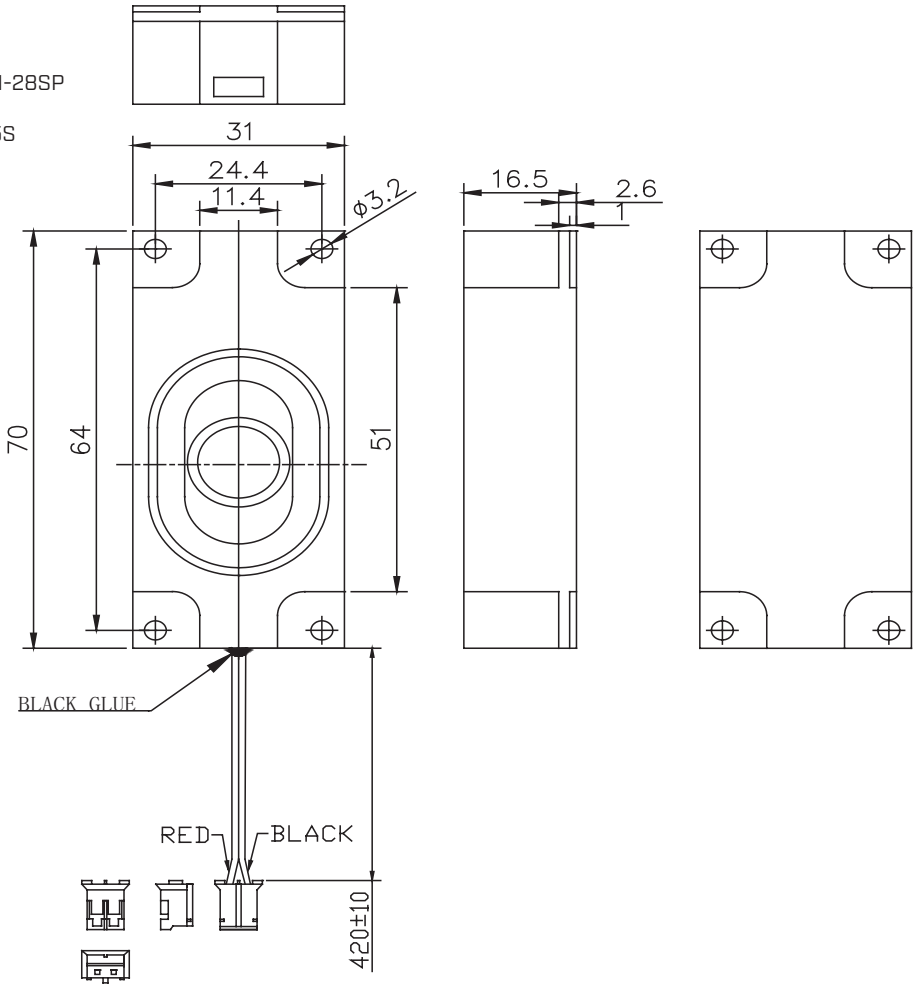

RESPONSE CURVES

Frequency Response Curve

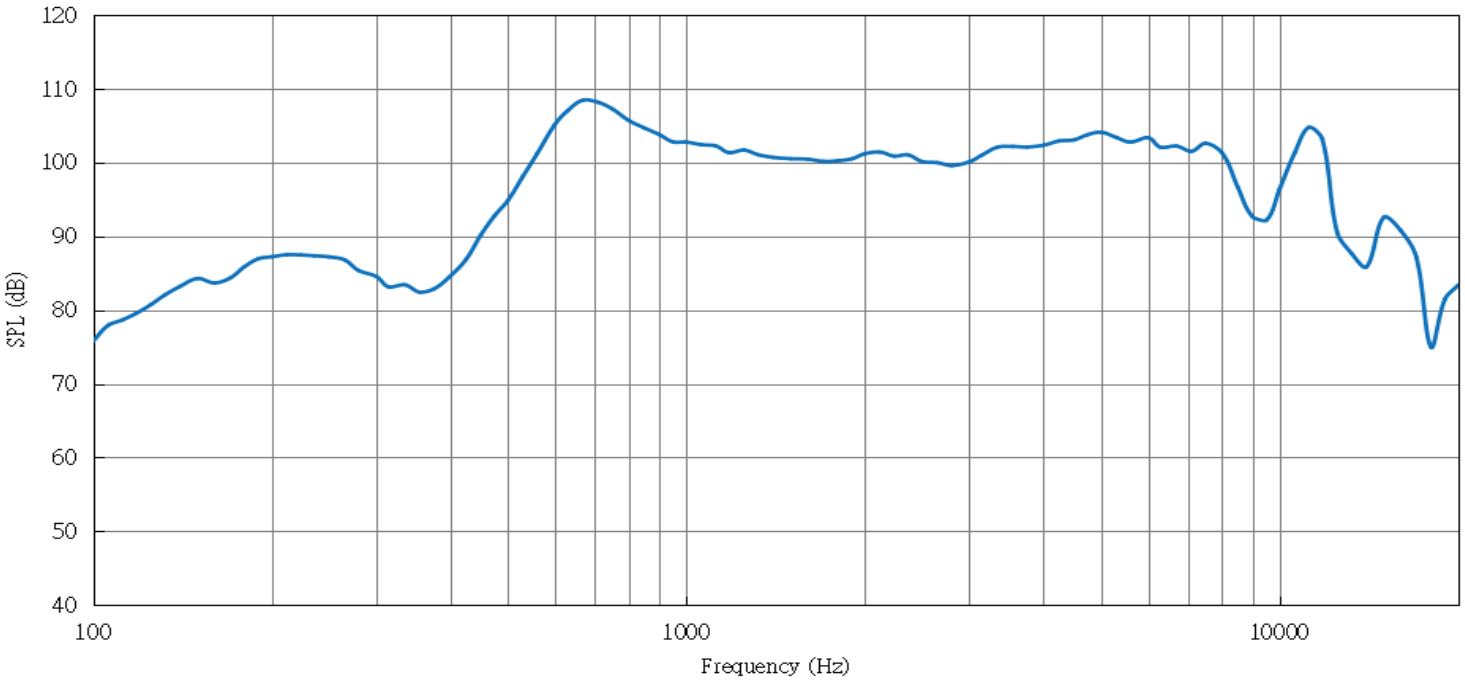

Total Harmonic Distortion Curve

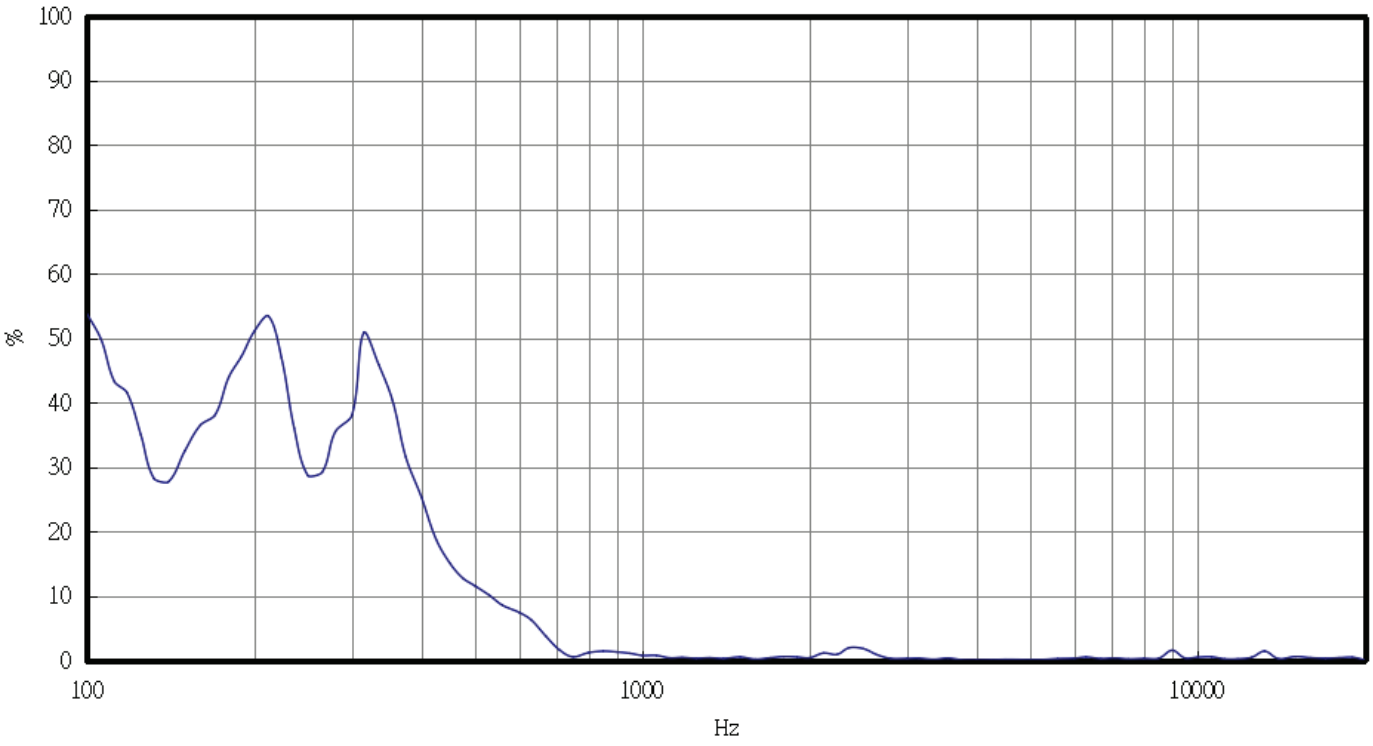

PACKAGING

units: mm

Tray QTY: 80 pcs per box (40 sets per box)
Carton Size: 595 x 510 x 220 mm
Carton QTY: 320 pcs per carton

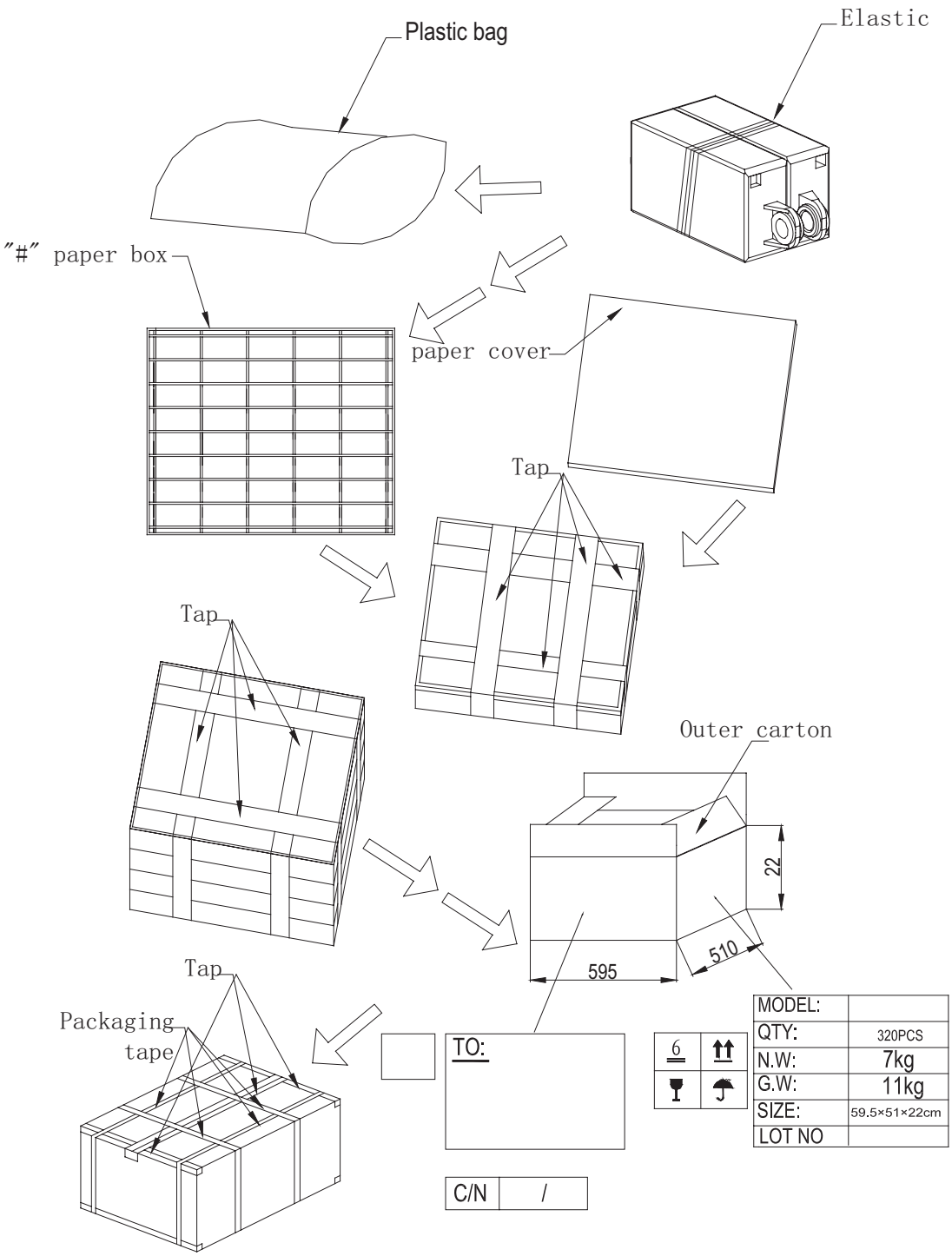

REVISION HISTORY

rev.	description	date
1.0	initial release	11/05/2019
1.01	added internal speaker details	03/12/2020
1.02	logo, datasheet style update	08/05/2022

The revision history provided is for informational purposes only and is believed to be accurate.

CUI Devices offers a one (1) year limited warranty. Complete warranty information is listed on our website.

CUI Devices reserves the right to make changes to the product at any time without notice. Information provided by CUI Devices is believed to be accurate and reliable. However, no responsibility is assumed by CUI Devices for its use, nor for any infringements of patents or other rights of third parties which may result from its use.

CUI Devices products are not authorized or warranted for use as critical components in equipment that requires an extremely high level of reliability. A critical component is any component of a life support device or system whose failure to perform can be reasonably expected to cause the failure of the life support device or system, or to affect its safety or effectiveness.

cuidevices.com