CUDEVICES

SERIES: CLI-3623X-95T | **DESCRIPTION:** PIEZO BUZZER INDICATOR

FEATURES

- four color options
- constant tone
- indicator
- mounting nut included



RoHS

SPECIFICATIONS

parameter	conditions/description	min	typ	max	units
rated voltage			12		Vdc
operating voltage		3		15	Vdc
current consumption	at rated voltage			18	mA
rated frequency		3,000	3,500	4,000	Hz
sound pressure level	at 30 cm, rated voltage	95			dB
tone	constant				
dimensions	Ø36.5 x 23.5				mm
weight			21		g
material	ABS 757 (UL94HB)				
terminal	pins (tin plated brass)				
operating temperature		-20		70	°C
storage temperature		-30		80	°C
washable	no				
RoHS	yes				

Notes: 1. All specifications measured at 25±2°C, humidity at 45-60%, unless otherwise noted.

SOLDERABILITY

parameter	conditions/description	min	typ	max	units
hand soldering	for maximum 5 seconds	330	350	370	°C
wave soldering	for maximum 5 seconds	255	260	265	°C

PART NUMBER KEY

CLI - 3623 **X** - 95T

Base Number

LED Color Options:
R = red
B = blue
G = green
Y = yellow

MECHANICAL DRAWING

units: mm
tolerance: ±0.5 mm

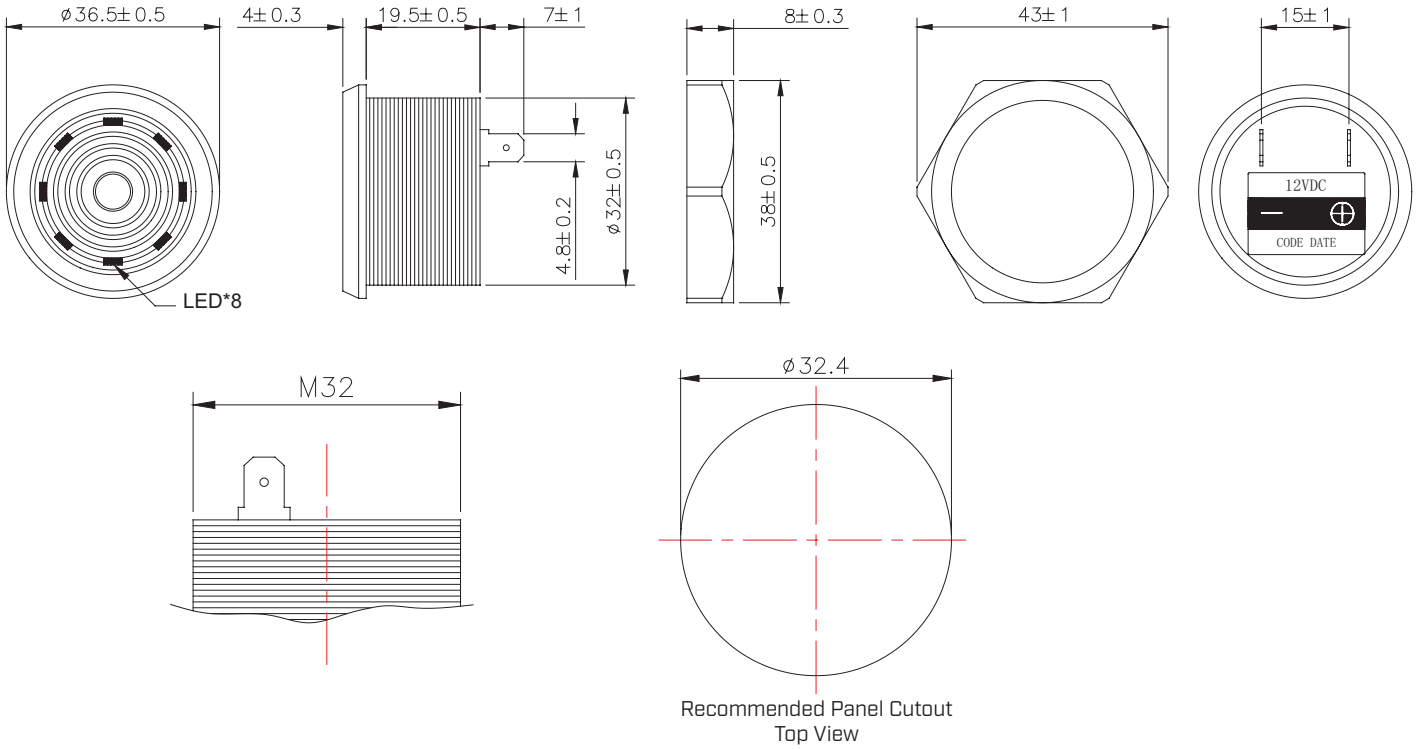

PERFORMANCE CURVES

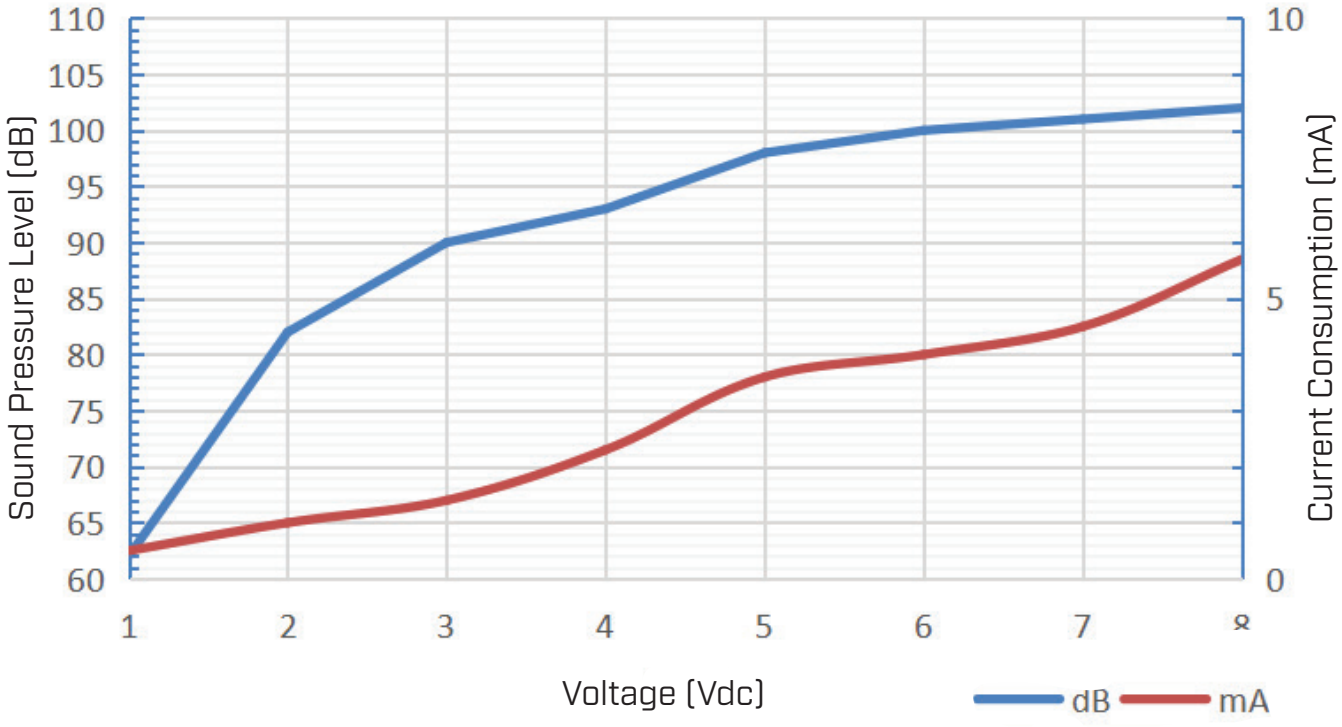

REVISION HISTORY

rev.	description	date
1.0	initial release	09/13/2023

The revision history provided is for informational purposes only and is believed to be accurate.

CUI Devices offers a one (1) year limited warranty. Complete warranty information is listed on our website.

CUI Devices reserves the right to make changes to the product at any time without notice. Information provided by CUI Devices is believed to be accurate and reliable. However, no responsibility is assumed by CUI Devices for its use, nor for any infringements of patents or other rights of third parties which may result from its use.

CUI Devices products are not authorized or warranted for use as critical components in equipment that requires an extremely high level of reliability. A critical component is any component of a life support device or system whose failure to perform can be reasonably expected to cause the failure of the life support device or system, or to affect its safety or effectiveness.

cuidevices.com