# MODEL: CMEJ-0413-42-SMT-TR | DESCRIPTION: ELECTRET CONDENSER MICROPHONE

## FEATURES

- omnidirectional
- low profile
- surface mount



RoHS

## ELECTRICAL

| parameter | conditions/description | min | typ | max | units |
|---|---|---|---|---|---|
| directivity | omnidirectional | | | | |
| sensitivity (S) | at 1 kHz (0 dB = 1 V/Pa) | -45 | -42 | -39 | dB |
| supply voltage ($V_{DD}$) | | 1.0 | 2.0 | 10 | V |
| current consumption | $V_{DD}$ = 2.0 V, RL = 2.2 kΩ | | | 0.5 | mA |
| sensitivity reduction | $V_{DD}$ = 2.0 ~ 1.5 V | | | 3 | dB |
| frequency (f) | | 100 | | 10,000 | Hz |
| signal to noise ratio (S/N) | at 1 kHz, Pin = 1 Pa (A-weighted) | | 60 | | dBA |
| total harmonic distortion (THD) | at 94 dB SPL, 1 kHz<br>at 115 dB SPL, 1 kHz | | | 1<br>3 | %<br>% |
| acoustic overload point (AOP) | at 1 kHz | | | 115 | dB SPL |
| output impedance (Zout) | at 1 kHz | | | 2.2 | kΩ |

Notes: 1. All specifications measured at 20±2°C, humidity at 60~70%, unless otherwise noted.

## ENVIRONMENTAL

| parameter | conditions/description | min | typ | max | units |
|---|---|---|---|---|---|
| operating temperature | | -40 | | 70 | °C |
| storage temperature | | -40 | | 85 | °C |
| operating humidity | non-condensing | 30 | | 85 | % |
| storage humidity | non-condensing | 30 | | 75 | % |
| RoHS | yes | | | | |

## MECHANICAL

| parameter | conditions/description | min | typ | max | units |
|---|---|---|---|---|---|
| dimensions | Ø4.0 x 1.3 | | | | mm |
| acoustic port | top | | | | |
| terminals | surface mount | | | | |
| weight | | | 0.07 | | g |

## MECHANICAL DRAWING

units: mm
tolerance: ±0.2 mm

| TERMINAL CONNECTIONS | |
|---|---|
| TERM. | FUNCTION |
| 1 | Output (+) |
| 2 | GND (-) |

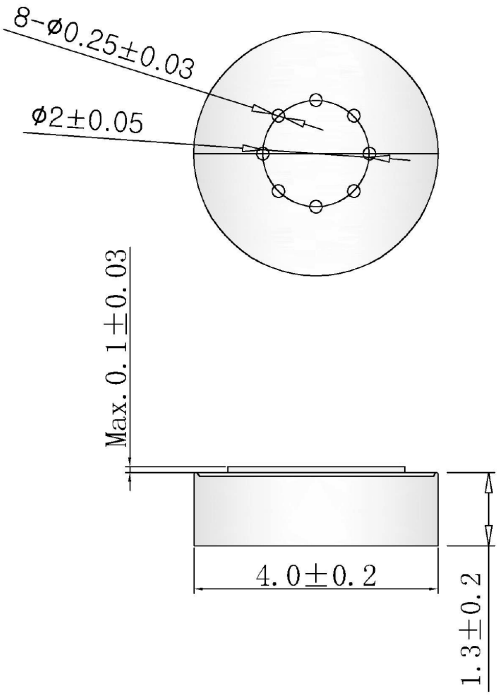


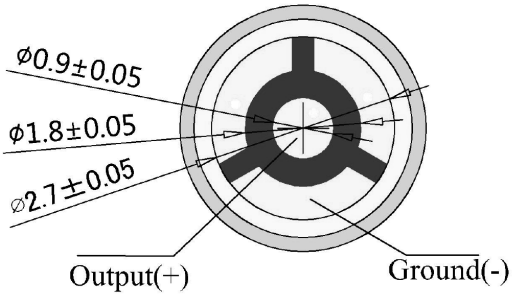


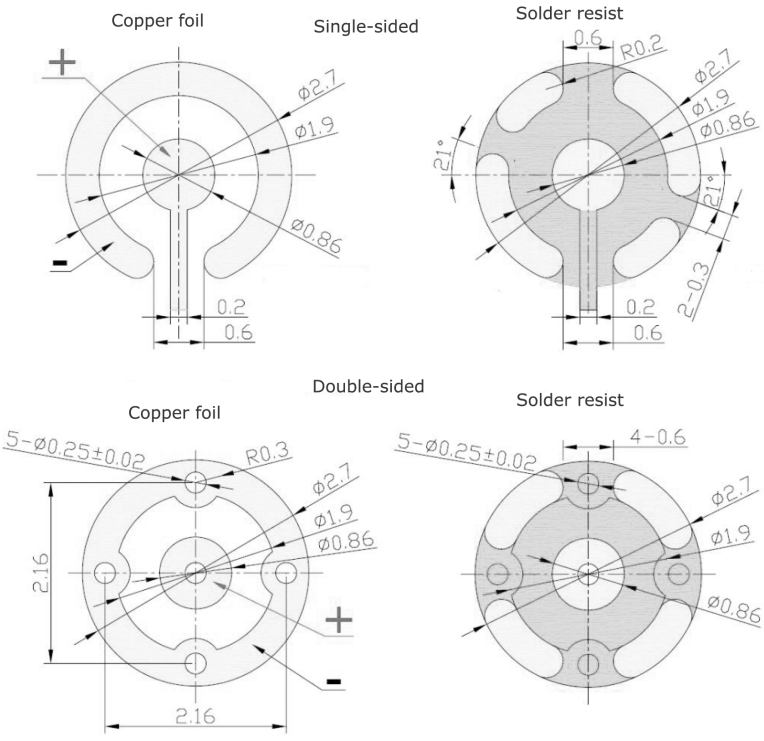


Recommended PCB Layout
Top View

## FREQUENCY RESPONSE CURVE

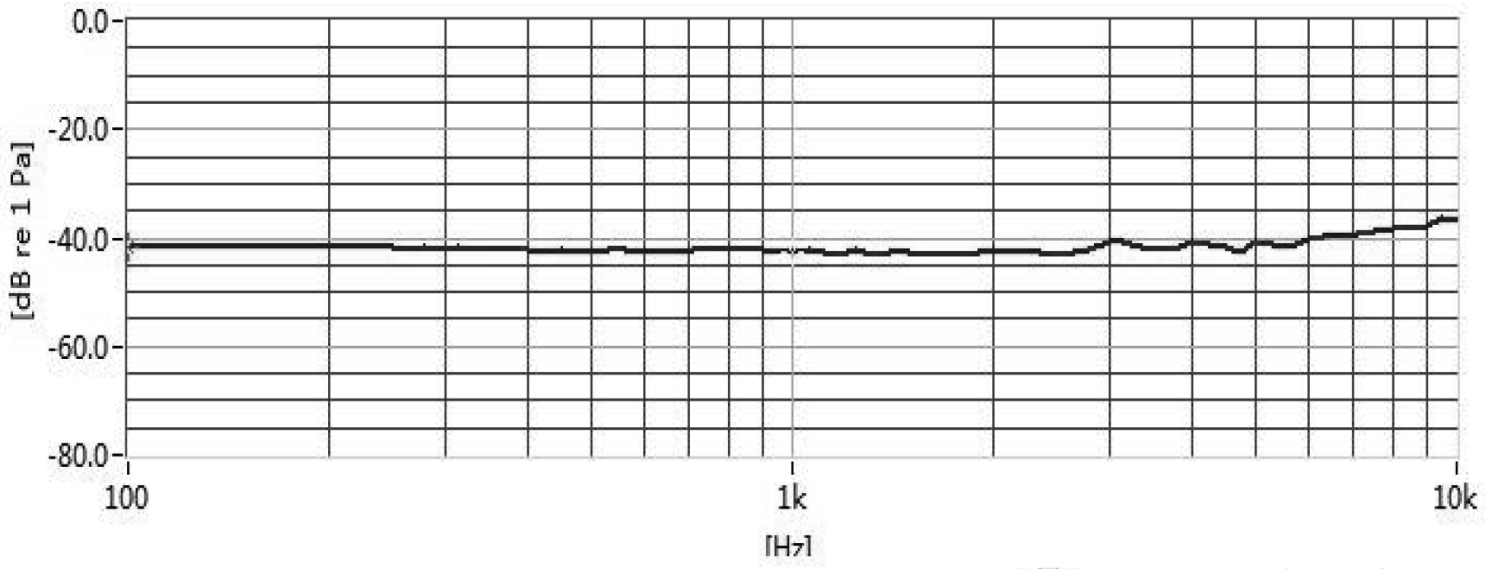


## APPLICATION CIRCUIT

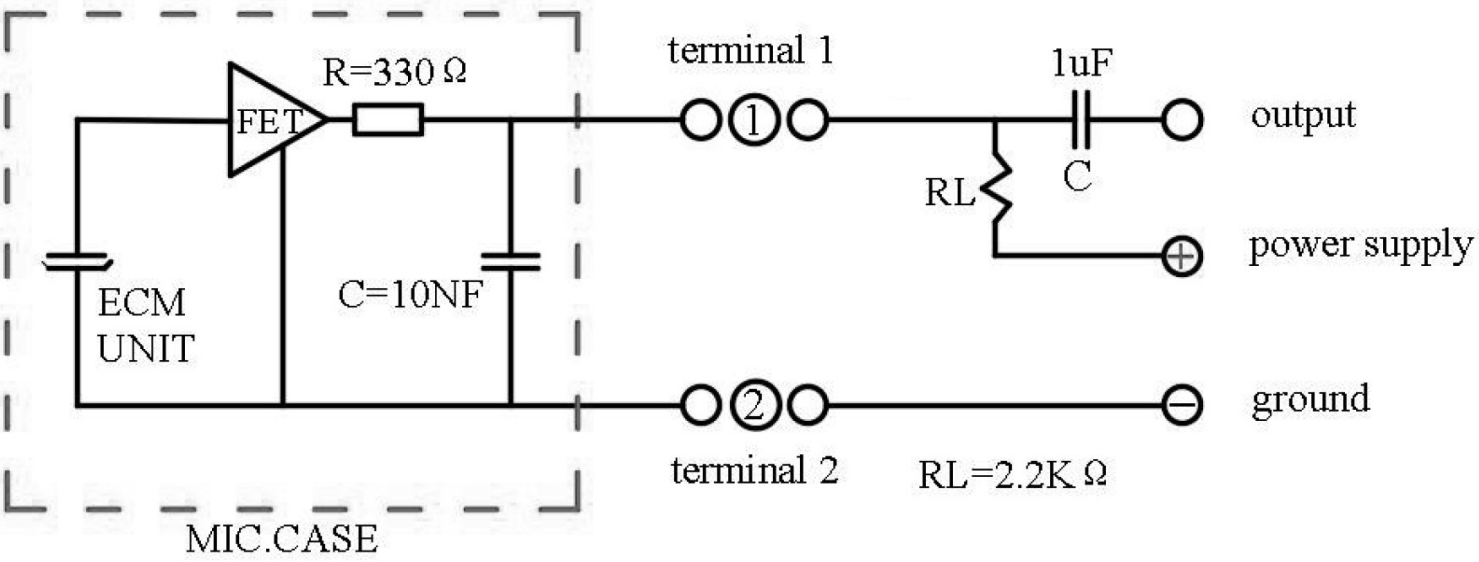

## SOLDERABILITY

| parameter | conditions/description | min | typ | max | units |
|---|---|---|---|---|---|
| reflow soldering | see reflow profile | | 255 | 260 | °C |

Note:
1. Vacuuming over acoustical hole is not allowed.
2. Not suitable for wash process.
3. Not recommended to exceed 2 reflow cycles.

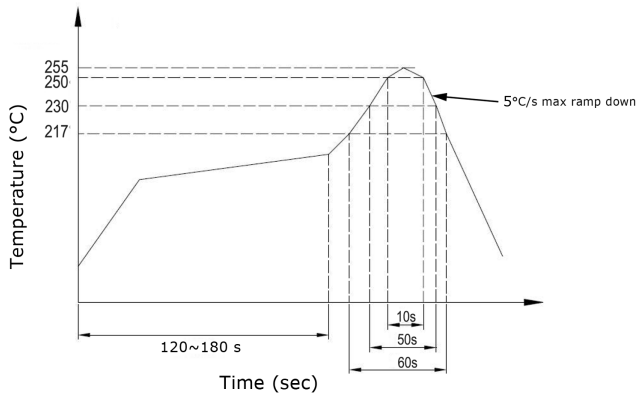


## PACKAGING

| parameter | conditions/description | min | typ | max | units |
|---|---|---|---|---|---|
| reel size | Ø330 mm max | | | | |
| reel QTY | 4,000 pcs per reel | | | | |

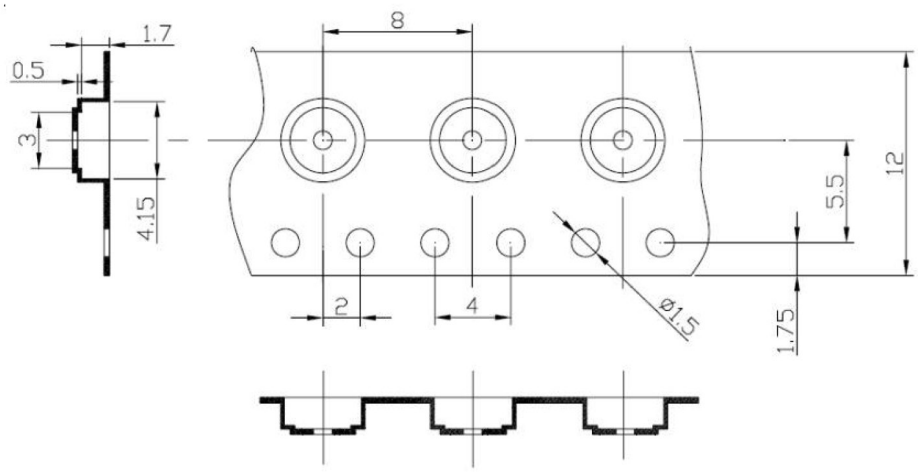


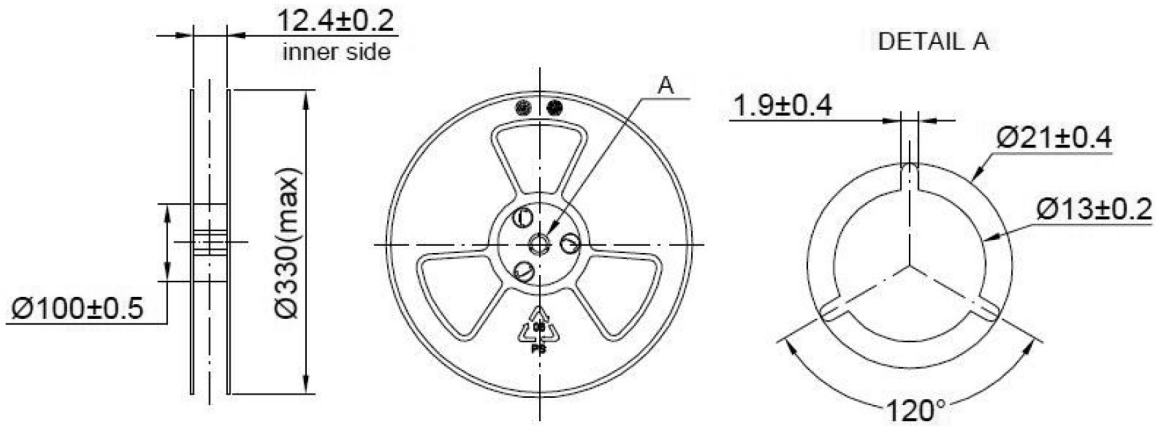

## REVISION HISTORY

| rev. | description | date |
|---|---|---|
| 1.0 | initial release | 06/07/2019 |
| 1.01 | brand update | 01/16/2020 |
| 1.02 | updated packaging | 06/29/2021 |
| 1.03 | logo, datasheet style update | 08/05/2022 |

The revision history provided is for informational purposes only and is believed to be accurate.

CUI Devices offers a one (1) year limited warranty. Complete warranty information is listed on our website.

CUI Devices reserves the right to make changes to the product at any time without notice. Information provided by CUI Devices is believed to be accurate and reliable. However, no responsibility is assumed by CUI Devices for its use, nor for any infringements of patents or other rights of third parties which may result from its use.

CUI Devices products are not authorized or warranted for use as critical components in equipment that requires an extremely high level of reliability. A critical component is any component of a life support device or system whose failure to perform can be reasonably expected to cause the failure of the life support device or system, or to affect its safety or effectiveness.

**cuidevices.com**