MODEL: CMEJ-9745-37-P | DESCRIPTION: ELECTRET CONDENSER MICROPHONE

FEATURES

- omnidirectional
- 9.7 mm diameter
- through hole



RoHS

ELECTRICAL

parameter	conditions/description	min	typ	max	units
directivity	omnidirectional				
sensitivity (S)	at 1 kHz (0 dB = 1 V/Pa)	-40	-37	-34	dB
supply voltage (V_{DD})		1.0	2.0	10	V
current consumption	V_{DD} = 2.0 V, RL = 2.2 kΩ			0.5	mA
sensitivity reduction	V_{DD} = 2.0 ~ 1.5 V			3	dB
frequency (f)		100		10,000	Hz
signal to noise ratio (S/N)	at 1 kHz, Pin = 1 Pa (A-weighted)		60		dBA
total harmonic distortion (THD)	at 94 dB SPL, 1 kHz at 115 dB SPL, 1 kHz			1 3	% %
acoustic overload point (AOP)	at 1 kHz			115	dB SPL
output impedance (Zout)	at 1 kHz			2.2	kΩ

Notes: 1. All specifications measured at 20±2°C, humidity at 60~70%, unless otherwise noted.

ENVIRONMENTAL

parameter	conditions/description	min	typ	max	units
operating temperature		-40		70	°C
storage temperature		-40		85	°C
operating humidity	non-condensing	30		85	%
storage humidity	non-condensing	30		75	%
hand soldering	for 1~3 seconds	340	350	360	°C
RoHS	yes				

MECHANICAL

parameter	conditions/description	min	typ	max	units
dimensions	Ø9.7 x 4.5				mm
acoustic port	top				
terminals	pins				
weight			0.73		g

MECHANICAL DRAWING

units: mm
tolerance: ±0.2 mm

TERMINAL CONNECTIONS	
TERM.	FUNCTION
1	Output (+)
2	GND (-)

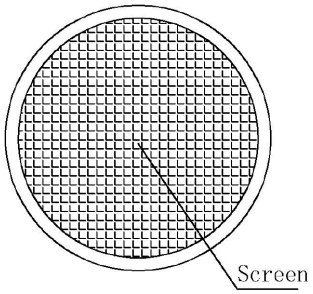

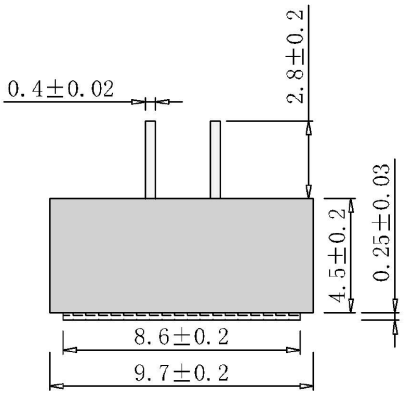

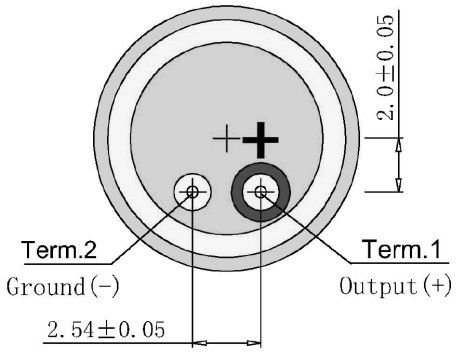

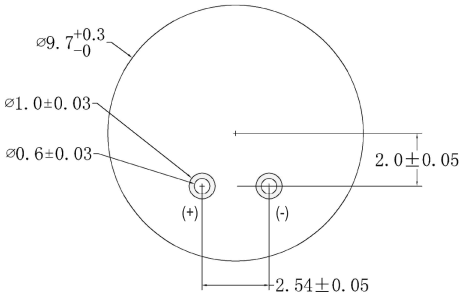

Recommended PCB Layout
Top View

FREQUENCY RESPONSE CURVE

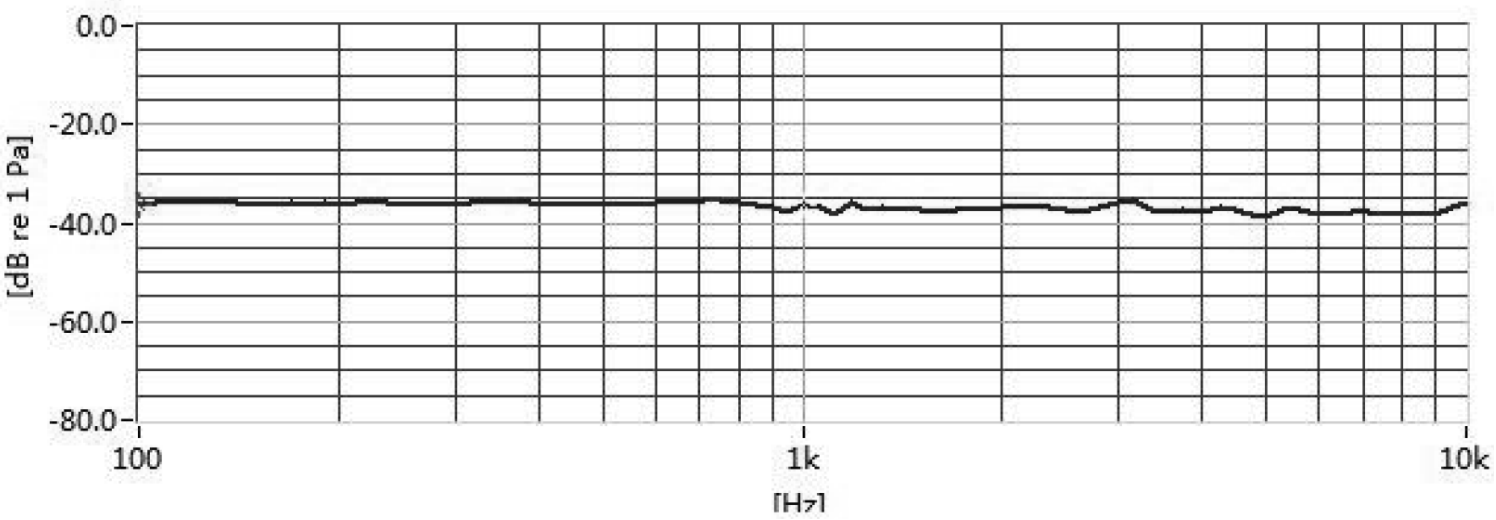

APPLICATION CIRCUIT

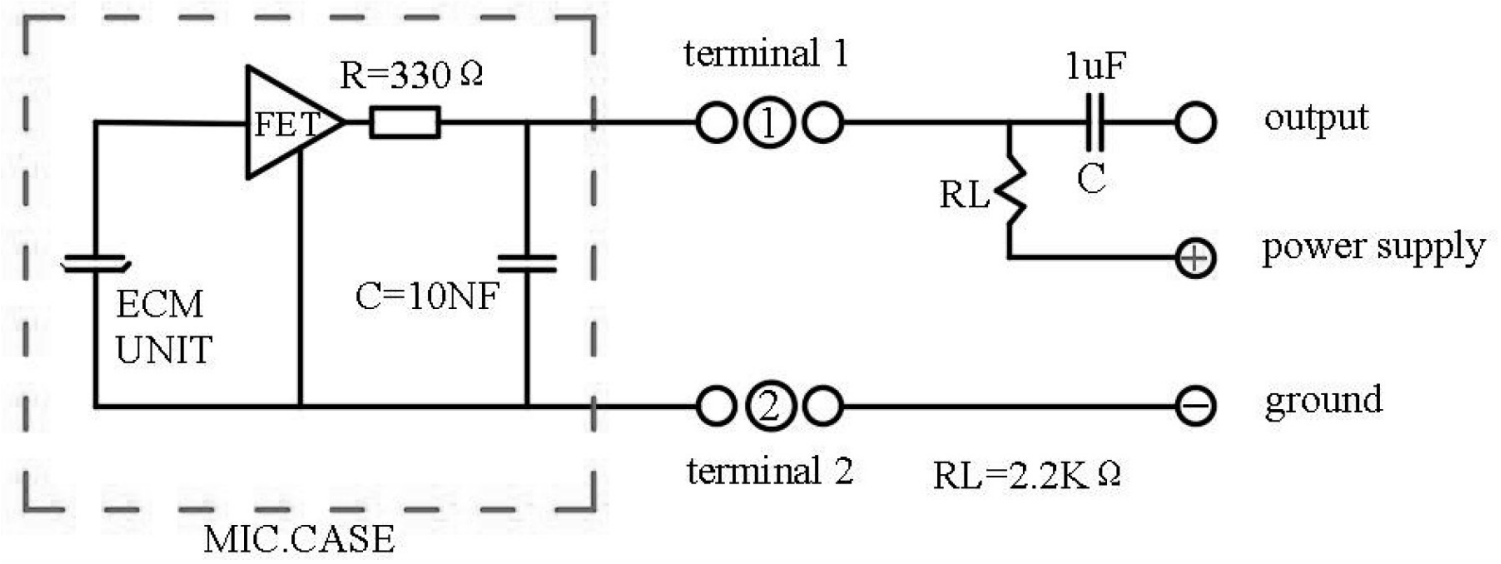

PACKAGING

Carton QTY: 2,160 pcs

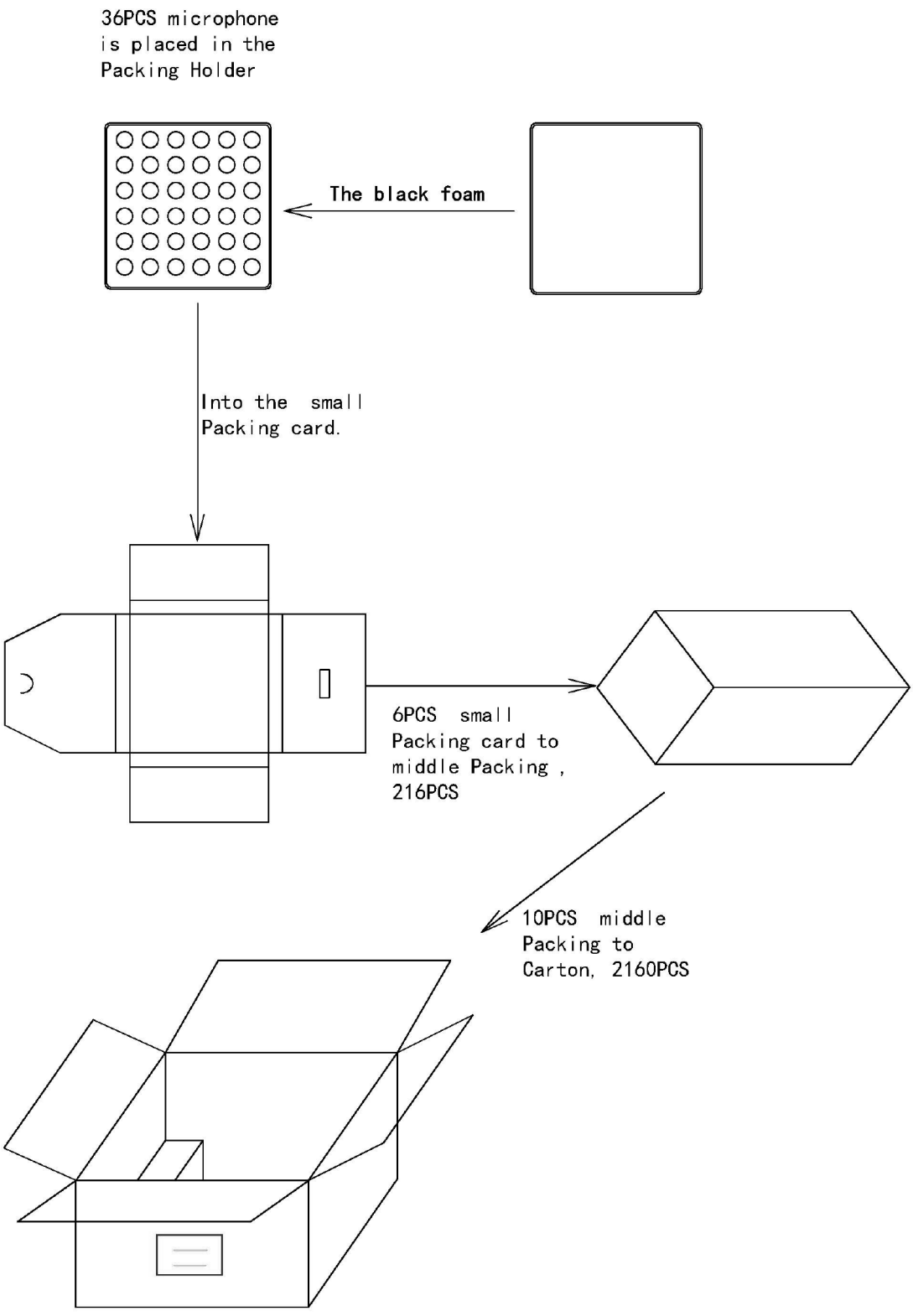

REVISION HISTORY

rev.	description	date
1.0	initial release	06/05/2019
1.01	brand update	01/17/2020
1.02	logo, datasheet style update	08/05/2022

The revision history provided is for informational purposes only and is believed to be accurate.

CUI Devices offers a one (1) year limited warranty. Complete warranty information is listed on our website.

CUI Devices reserves the right to make changes to the product at any time without notice. Information provided by CUI Devices is believed to be accurate and reliable. However, no responsibility is assumed by CUI Devices for its use, nor for any infringements of patents or other rights of third parties which may result from its use.

CUI Devices products are not authorized or warranted for use as critical components in equipment that requires an extremely high level of reliability. A critical component is any component of a life support device or system whose failure to perform can be reasonably expected to cause the failure of the life support device or system, or to affect its safety or effectiveness.

cuidevices.com