CUDEVICES

MODEL: CMI-1210-92T | **DESCRIPTION:** MAGNETIC BUZZER INDICATOR

FEATURES

- 12 Vdc rated
- 92 dB
- through hole



RoHS

SPECIFICATIONS

parameter	conditions/description	min	typ	max	units
rated voltage			12		Vdc
operating voltage		7		15	Vdc
current consumption	at rated voltage			35	mA
rated frequency	at rated voltage	2,250	2,400	2,550	Hz
sound pressure level	at 10 cm, rated voltage (A-weighted)	87	92		dBA
tone	continuous				
dimensions	Ø12 x 9.5				mm
weight			1.6		g
material	PBT (UL94V-0)				
terminal	pins (tin plating)				
operating temperature		-40		85	°C
storage temperature		-40		85	°C
washable	yes				
RoHS	yes				

Notes: 1. All specifications measured at 5~35°C, humidity at 45~85%, under 86~106kPa pressure, unless otherwise noted.

SOLDERABILITY

parameter	conditions/description	min	typ	max	units
hand soldering	maximum 2 seconds	330		380	°C
wave soldering	see recommended wave soldering profile			250	°C

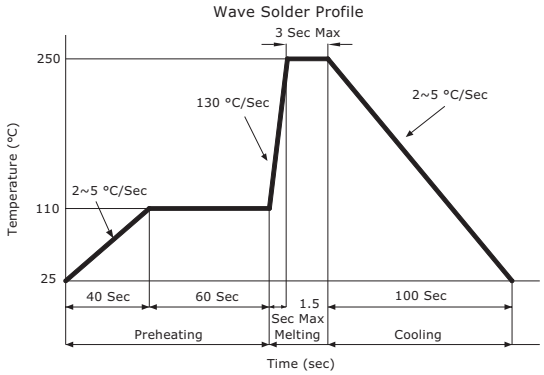

MECHANICAL DRAWING

units: mm
tolerance: ±0.5 mm

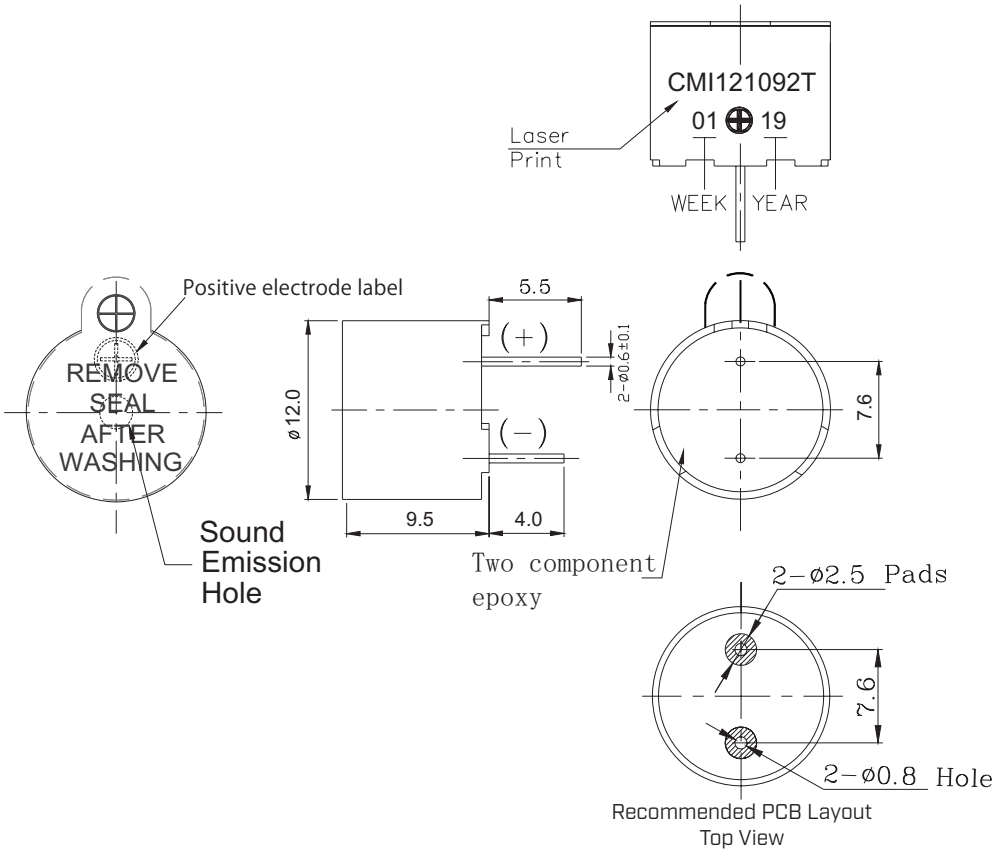

PERFORMANCE CURVES

Voltage vs. Sound Pressure Level
at 10 cm, 25°C

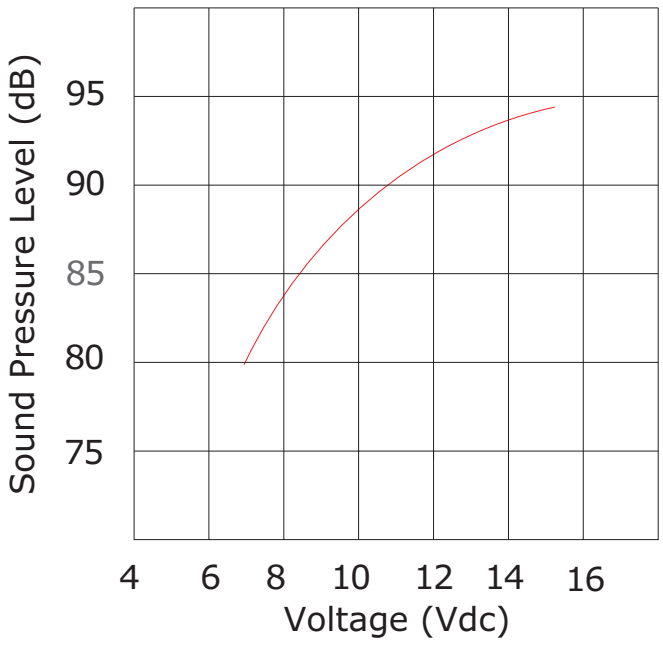

Voltage vs. Current Consumption
at 10 cm, 25°C

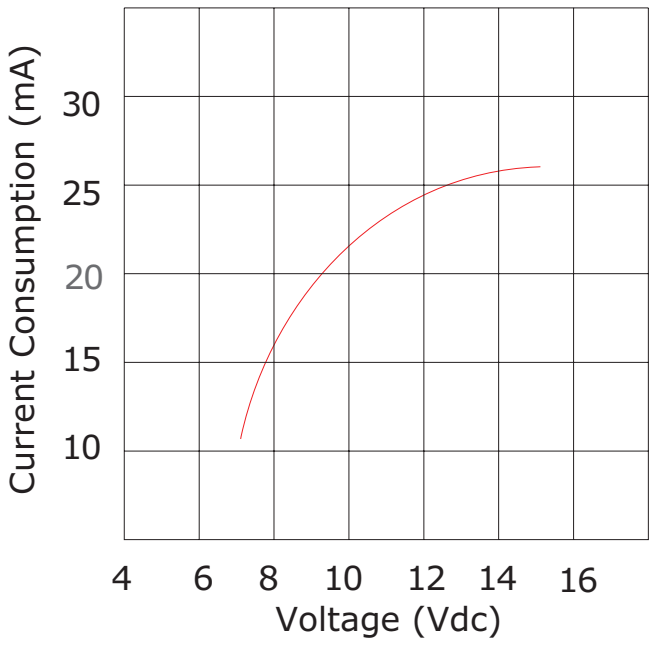

PACKAGING

units: mm

Tray Size: 184 x 180 x 23 mm
Carton Size: 445 x 405 x 320 mm
Tray QTY: 100 pcs per tray
Carton QTY: 6,000 pcs per carton

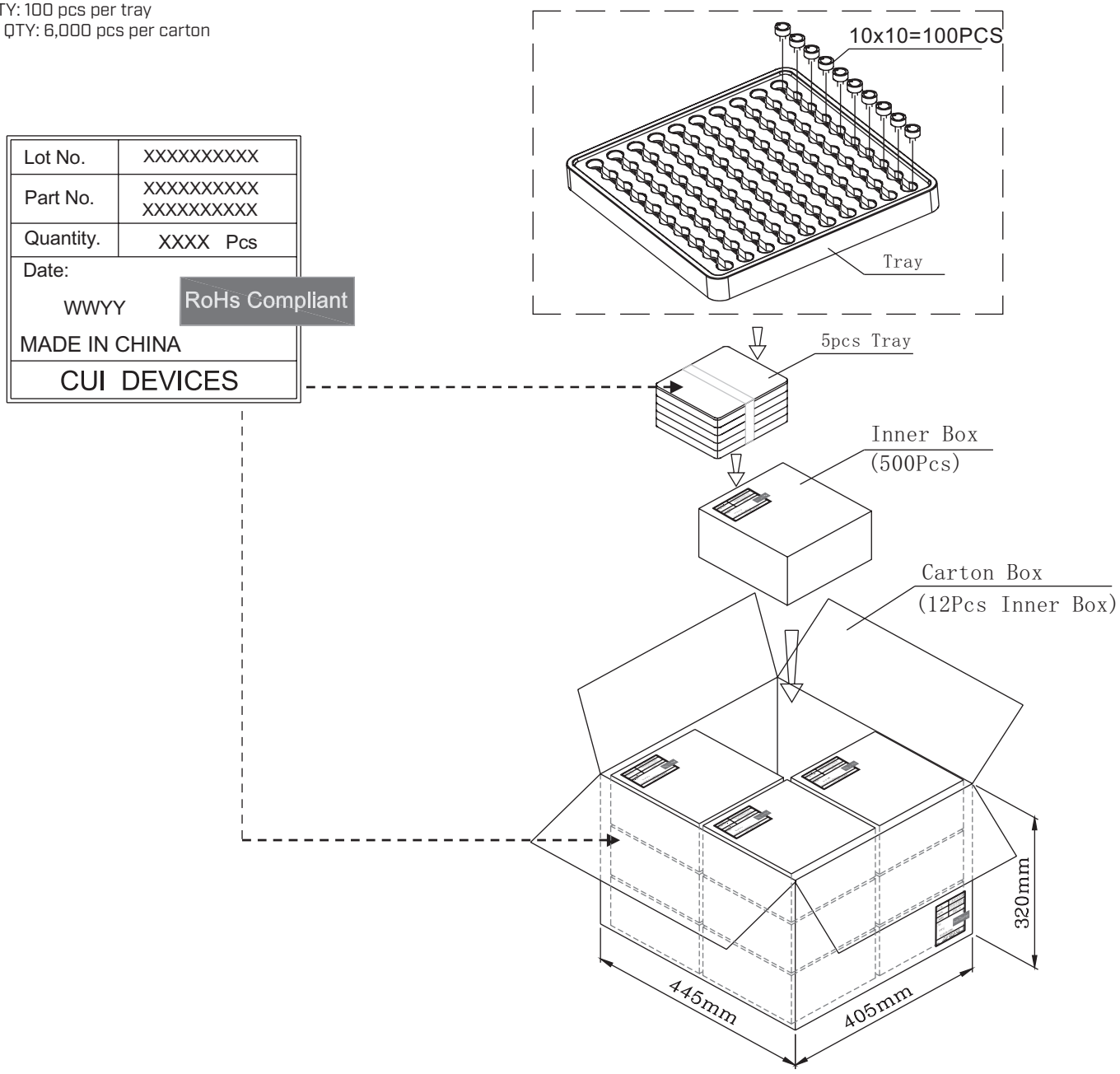

Lot No.	XXXXXXXXXX
Part No.	XXXXXXXXXX XXXXXXXXXX
Quantity.	XXXX Pcs
Date: WWYY	RoHs Compliant
MADE IN CHINA	
CUI DEVICES	

REVISION HISTORY

rev.	description	date
1.0	initial release	09/17/2020
1.01	logo, datasheet style update	08/05/2022

The revision history provided is for informational purposes only and is believed to be accurate.

CUI Devices offers a one (1) year limited warranty. Complete warranty information is listed on our website.

CUI Devices reserves the right to make changes to the product at any time without notice. Information provided by CUI Devices is believed to be accurate and reliable. However, no responsibility is assumed by CUI Devices for its use, nor for any infringements of patents or other rights of third parties which may result from its use.

CUI Devices products are not authorized or warranted for use as critical components in equipment that requires an extremely high level of reliability. A critical component is any component of a life support device or system whose failure to perform can be reasonably expected to cause the failure of the life support device or system, or to affect its safety or effectiveness.

cuidevices.com