MODEL: CMM-2718AT-42358-TR | DESCRIPTION: MEMS MICROPHONE

FEATURES

- analog
- top port
- reflow solder compatible
- omnidirectional



RoHS

ELECTRICAL

parameter	conditions/description	min	typ	max	units
directivity	omnidirectional				
sensitivity (S)	at 1 V/Pa, 1 kHz	-45	-42	-39	dB
supply voltage (V_{DD})		1.5	1.8	3.6	V
current consumption (I_{DSS})			150	170	µA
sensitivity reduction	no change across the voltage range				dB
frequency (f)		100		10,000	Hz
signal to noise ratio (S/N)	20 kHz bandwidth, A-weighted		58		dBA
total harmonic distortion (THD)	at 94 dB SPL, 1 kHz, Rload > 2 k		0.1		%
acoustic overload point (AOP)	at 10% THD, 1 kHz, Rload > 2 k		130		dB SPL
output impedance (Zout)	at 1 kHz		200		Ω
dc output			0.7		V
PSRR	200 mVp-p sine wave @ 1 kHz, V_{DD} = 1.8 V		70		dB
PSR	100 mVp-p square wave @ 217 Hz, V_{DD} = 1.8 V		-100		dBV(A)

Notes: 1. All specifications measured at 25°C, humidity at 45±5%, unless otherwise noted.

ENVIRONMENTAL

parameter	conditions/description	min	typ	max	units
operating temperature		-30		85	°C
storage temperature	in packaging	-40		100	°C
RoHS	yes				

MECHANICAL

parameter	conditions/description	min	typ	max	units
dimensions	2.75 x 1.85 x 0.95				mm
acoustic port	top				
terminals	surface mount				
weight			0.03		g

MECHANICAL DRAWING

units: mm
tolerance:
length, width, height: ±0.10 mm
acoustic port: ±0.05mm
unless otherwise specified: ±0.15 mm

TERMINAL CONNECTIONS	
TERM.	FUNCTION
1	output
2	GND
3	GND
4	VDD

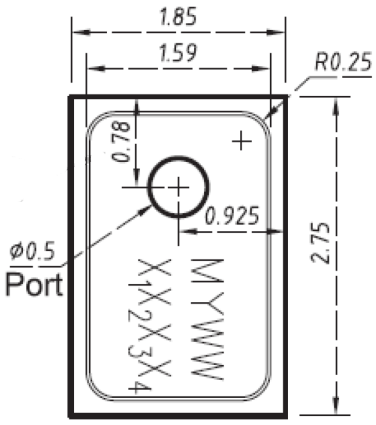

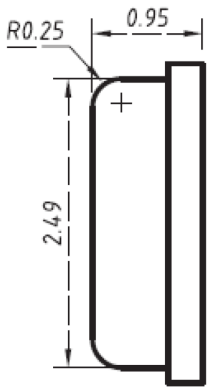

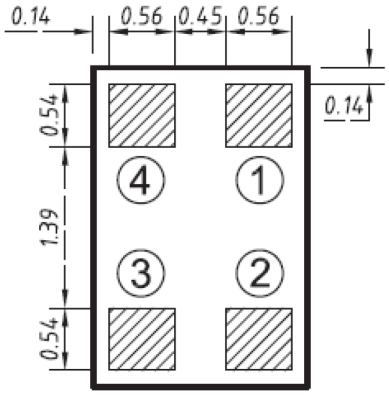

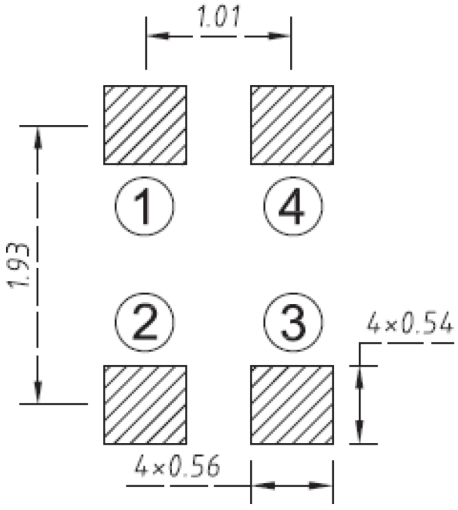

Recommended PCB Layout
Top View

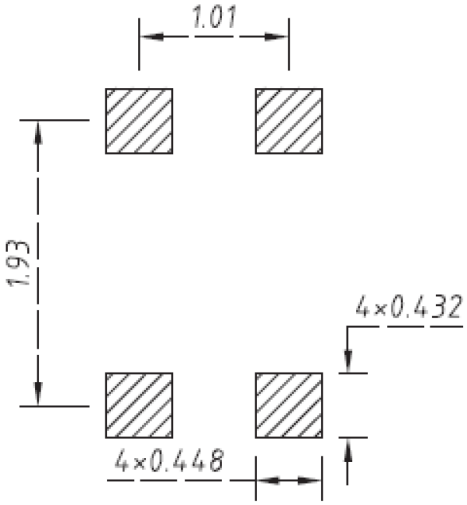

Recommended Stencil Layout
Top View

FREQUENCY RESPONSE CURVE

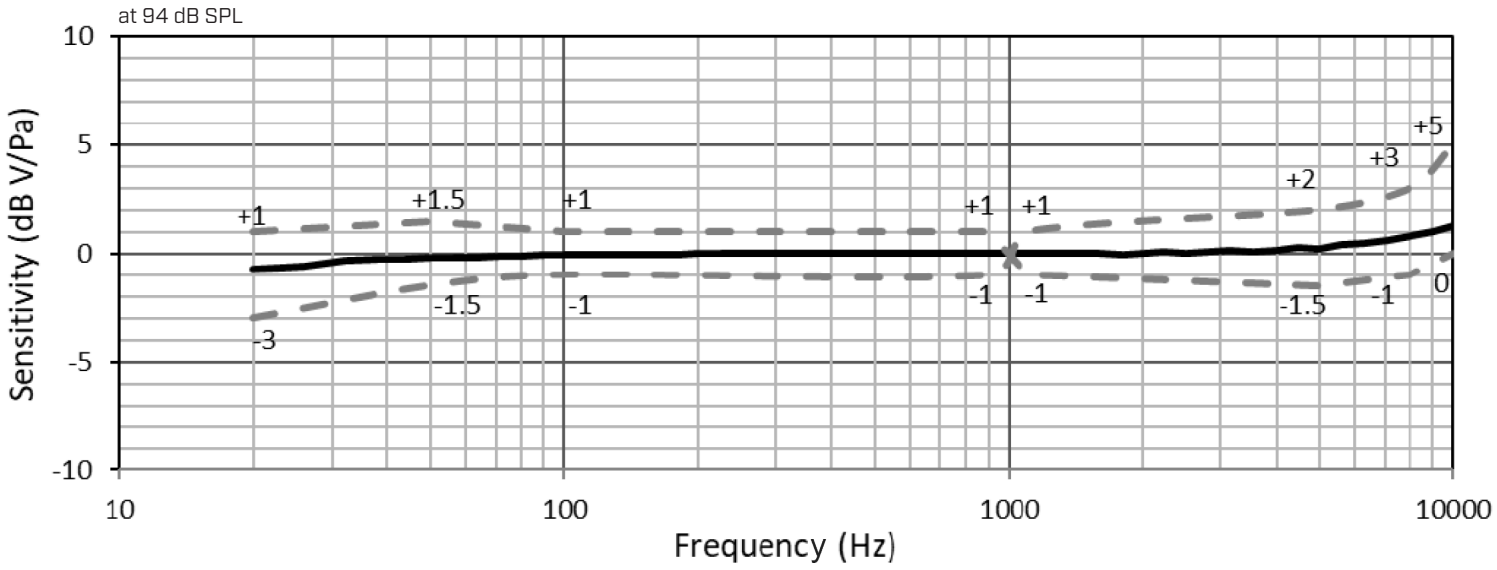

INTERFACE CIRCUIT

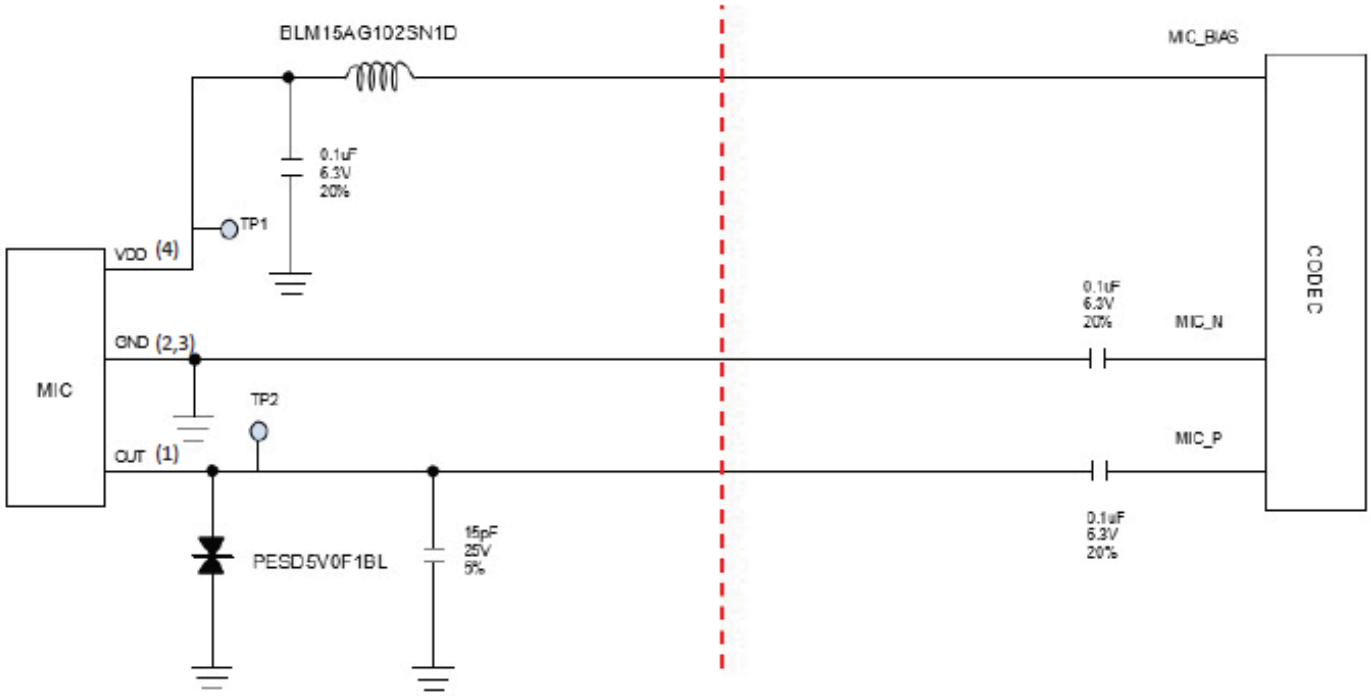

Note: 2. It is recommended that the components on the left side of red line be placed close to MIC, and components on the right side of red line be placed close to CODEC.

SOLDERABILITY

parameter	conditions/description	min	typ	max	units
reflow soldering[3]	see reflow profile			260	°C

Note: 3. Not recommended to exceed 3 reflow cycles.

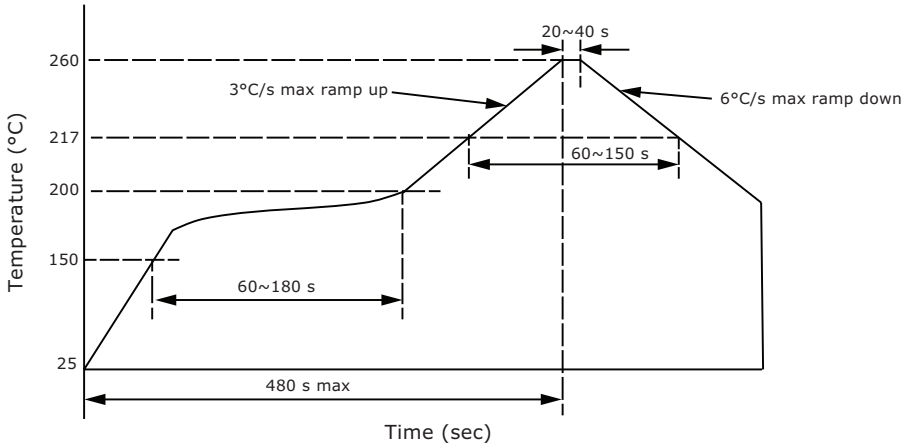

HANDLING RECOMMENDATIONS

1. Not recommended to blow air heavily over acoustic port as debris could impact mic function.
2. Not suitable for wash process after reflow.
3. Not recommended to brush board with or without solvents after reflow process.
4. Not recommended to directly expose to ultrasonic processing or cleaning.
5. Not recommended to inserty any object in port of device at any time.
6. Not recommended to apply over 30 psi of air pressure into the port hole.
7. Not recommended to pull a vacuum over port hole.
8. Not recommended to apply a vacuum when repackaging into sealed bag a rate faster than 0.5 atm/sec.
9. Not recommended to clean table or carried plate with air guarding system that could induce particle floating inside mic.

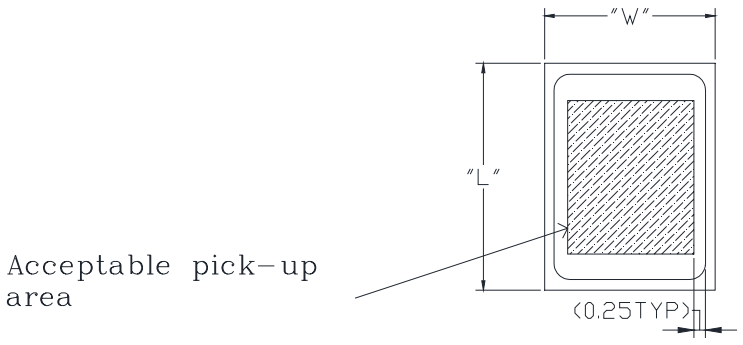

Recommended Vacuum Nozzle Pickup
Top View

PACKAGING

parameter	conditions/description	min	typ	max	units
MSL	Class 1				
reel size	Ø7 inches				
reel QTY[4]	1,100 pcs per reel				
carton size	310 x 210 x 165 mm				
carton QTY	5,500 pcs				

Note: 4. The leader tape of the reel, and the beginning tape fixed into the reel center, will leave 25 blank cavities each.

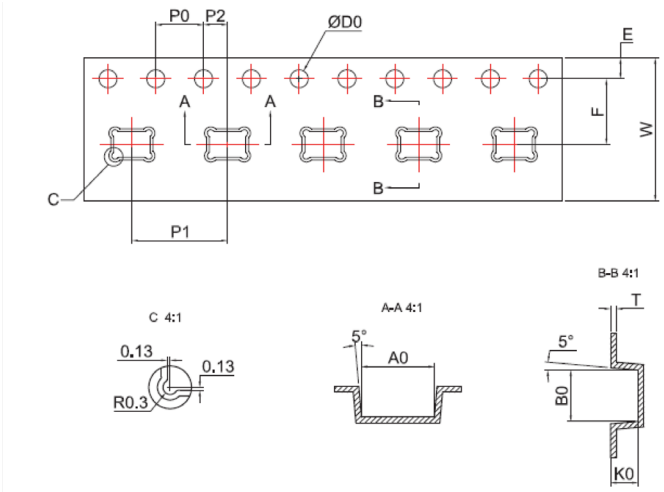

Item	W	E	F	ØD0	K0
DIM(mm)	12.0±0.30	1.75±0.10	5.50±0.10	1.50+0.10/-0	1.15±0.10
Item	P0	10P0	P1	A0	B0
DIM(mm)	4.0±0.10	40.0±0.20	8.0±0.10	3.05±0.10	2.15±0.10
Item	P2	T	--	--	--
DIM(mm)	2.0±0.10	0.25±0.05	--	--	--

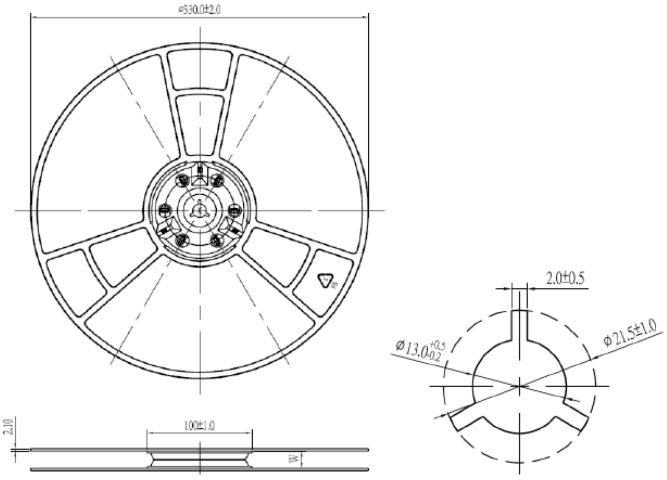

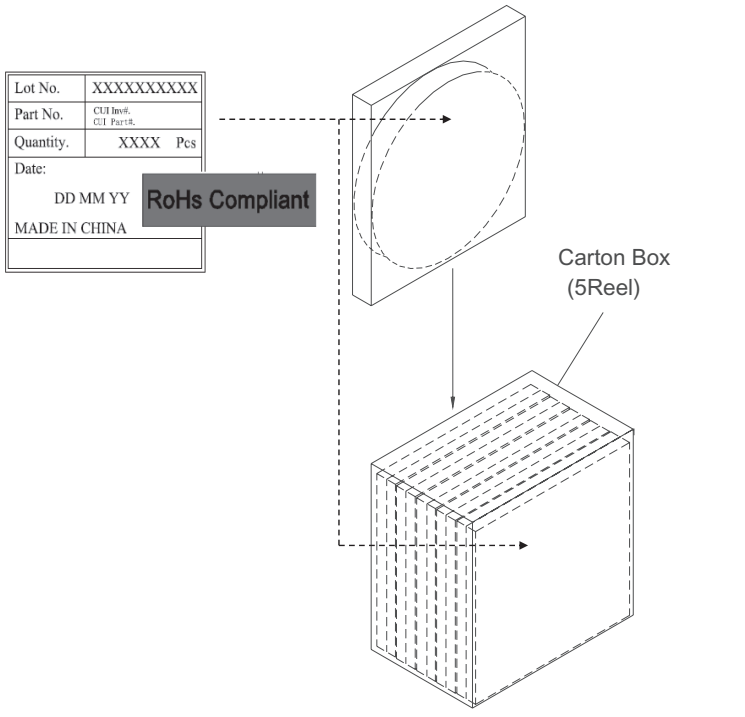

REVISION HISTORY

rev.	description	date
1.0	initial release	03/09/2022
1.01	logo, datasheet style update	08/05/2022

The revision history provided is for informational purposes only and is believed to be accurate.

CUI Devices offers a one (1) year limited warranty. Complete warranty information is listed on our website.

CUI Devices reserves the right to make changes to the product at any time without notice. Information provided by CUI Devices is believed to be accurate and reliable. However, no responsibility is assumed by CUI Devices for its use, nor for any infringements of patents or other rights of third parties which may result from its use.

CUI Devices products are not authorized or warranted for use as critical components in equipment that requires an extremely high level of reliability. A critical component is any component of a life support device or system whose failure to perform can be reasonably expected to cause the failure of the life support device or system, or to affect its safety or effectiveness.

cuidevices.com