CUI DEVICES



**MODEL:** CMM-3722AT-42117-TR | **DESCRIPTION:** MEMS MICROPHONE

**FEATURES**
- analog
- small package
- reflow solder compatible
- omnidirectional

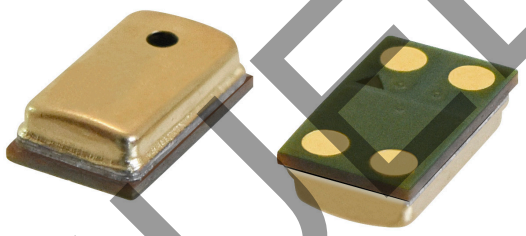

RoHS

## ELECTRICAL

| parameter | conditions/description | min | typ | max | units |
|---|---|---|---|---|---|
| directivity | omnidirectional | | | | |
| sensitivity (S) | at 94 dB SPL, 1 kHz | -43 | -42 | -41 | dB |
| supply voltage ($V_{DD}$) | | 1.6 | 2.0 | 3.6 | V |
| current consumption ($I_{DSS}$) | $V_{DD}$ = 2.0 V | | 160 | | µA |
| sensitivity reduction | $V_{DD}$ = 3.6 ~ 1.6 V | | -0.5 | | dB |
| frequency (f) | | 100 | | 10,000 | Hz |
| signal to noise ratio (S/N) | at 94 dB SPL, 1 kHz (A-weighted) | | 57 | | dBA |
| total harmonic distortion (THD) | at 94 dB SPL, 1 kHz | | 0.2 | | % |
| acoustic overload point (AOP) | at 10% THD, 1 kHz | | 125 | | dB SPL |
| output impedance (Zout) | at 1 kHz | | | 300 | Ω |

Notes: 1. All specifications measured at 23±2°C, humidity at 55±20%, unless otherwise noted.

## ENVIRONMENTAL

| parameter | conditions/description | min | typ | max | units |
|---|---|---|---|---|---|
| operating temperature | | -40 | | 105 | °C |
| storage temperature | in packaging | -40 | | 85 | °C |
| RoHS | yes | | | | |

## MECHANICAL

| parameter | conditions/description | min | typ | max | units |
|---|---|---|---|---|---|
| dimensions | 3.76 x 2.24 x 1.10 | | | | mm |
| acoustic port | top | | | | |
| terminals | surface mount | | | | |
| weight | | | 0.024 | | g |

DISCONTINUED

## MECHANICAL DRAWING

units: mm
tolerance: ±0.1 mm

| TERMINAL CONNECTIONS | |
|---|---|
| TERM. | FUNCTION |
| 1 | $V_{DD}$ |
| 2 | GND |
| 3 | GND |
| 4 | output |

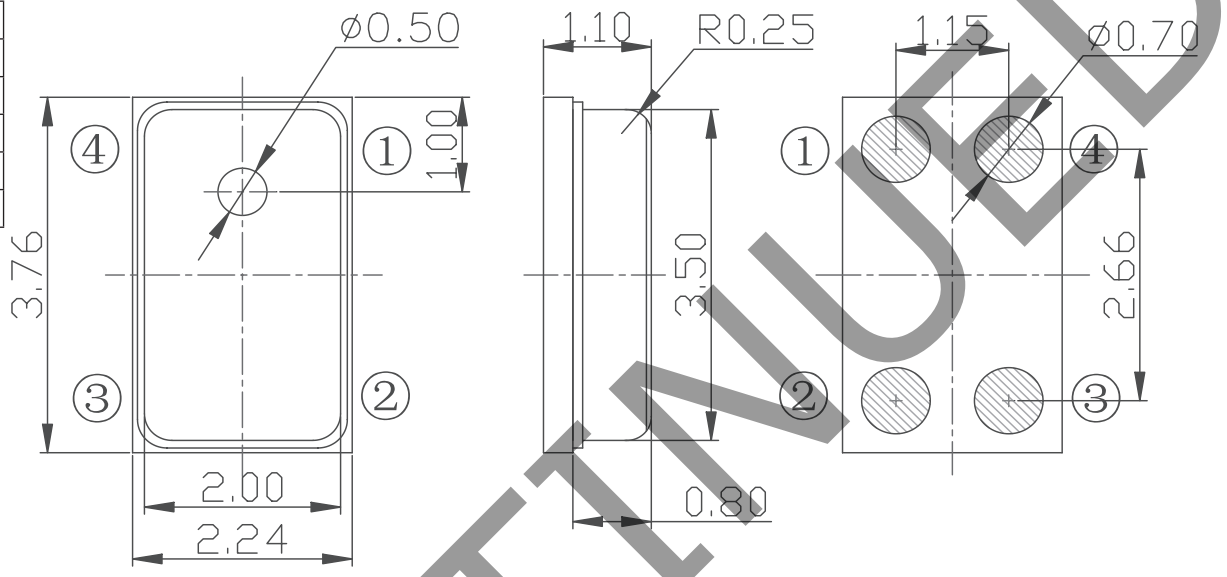


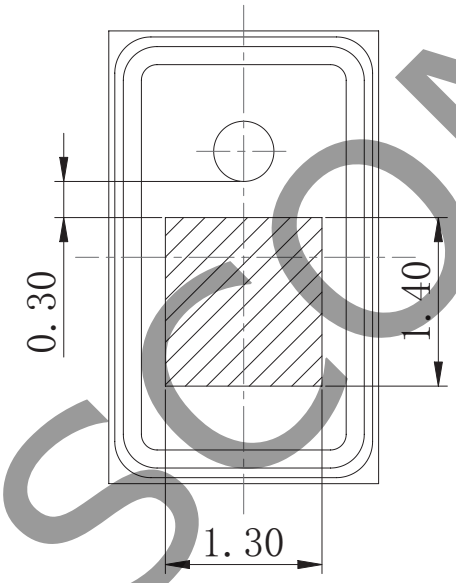


Recommended Vacuum Nozzle Pickup
Top View

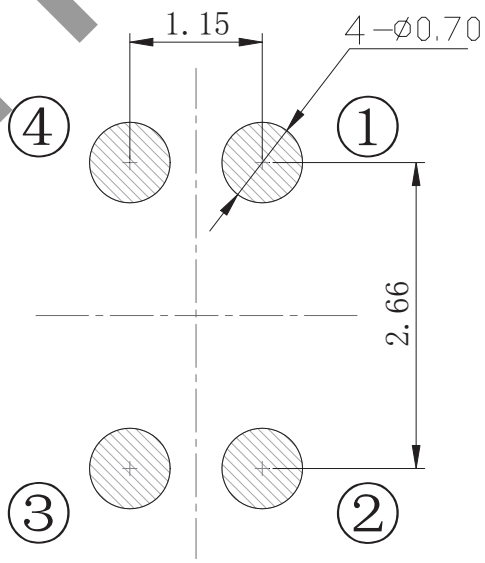


Recommended PCB Layout
Top View

DISCONTINUED

## FREQUENCY RESPONSE CURVE

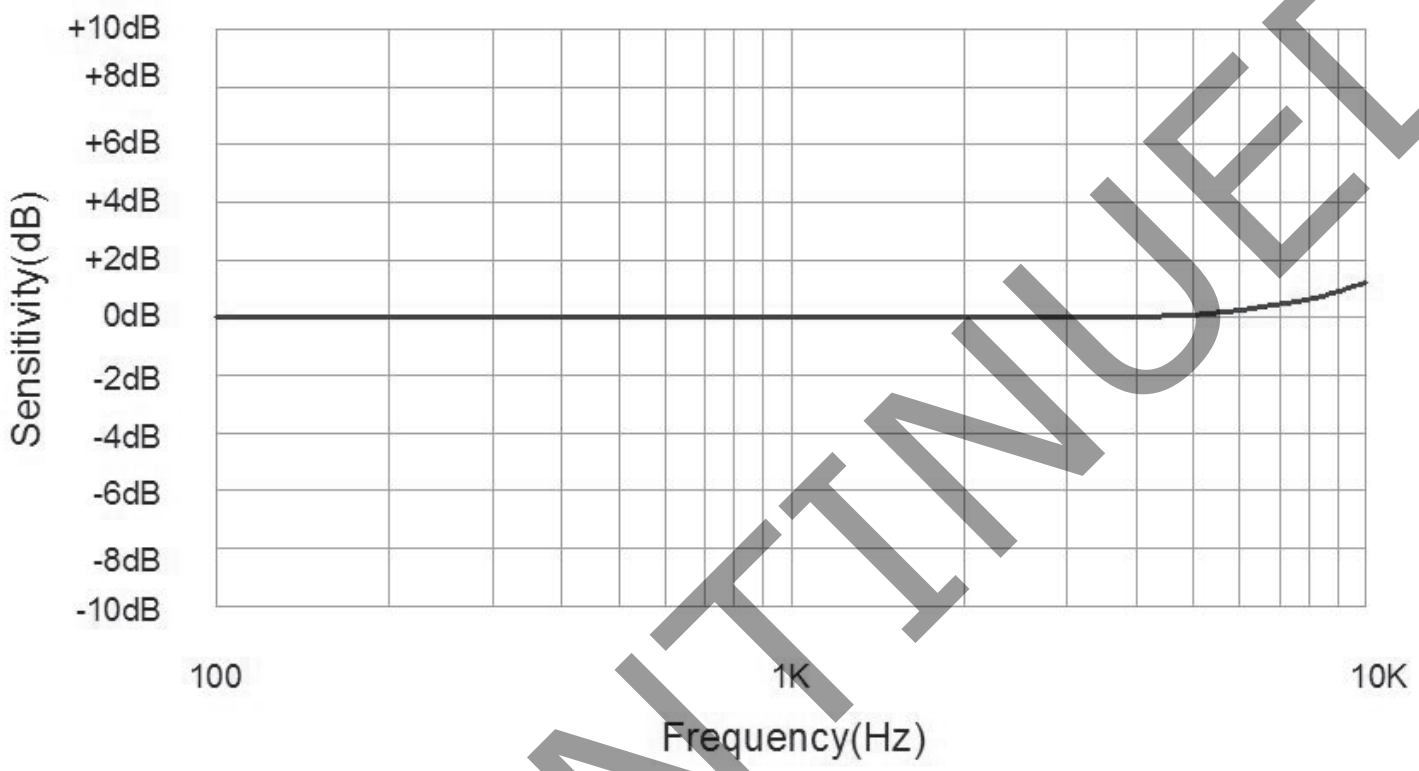


## APPLICATION CIRCUIT

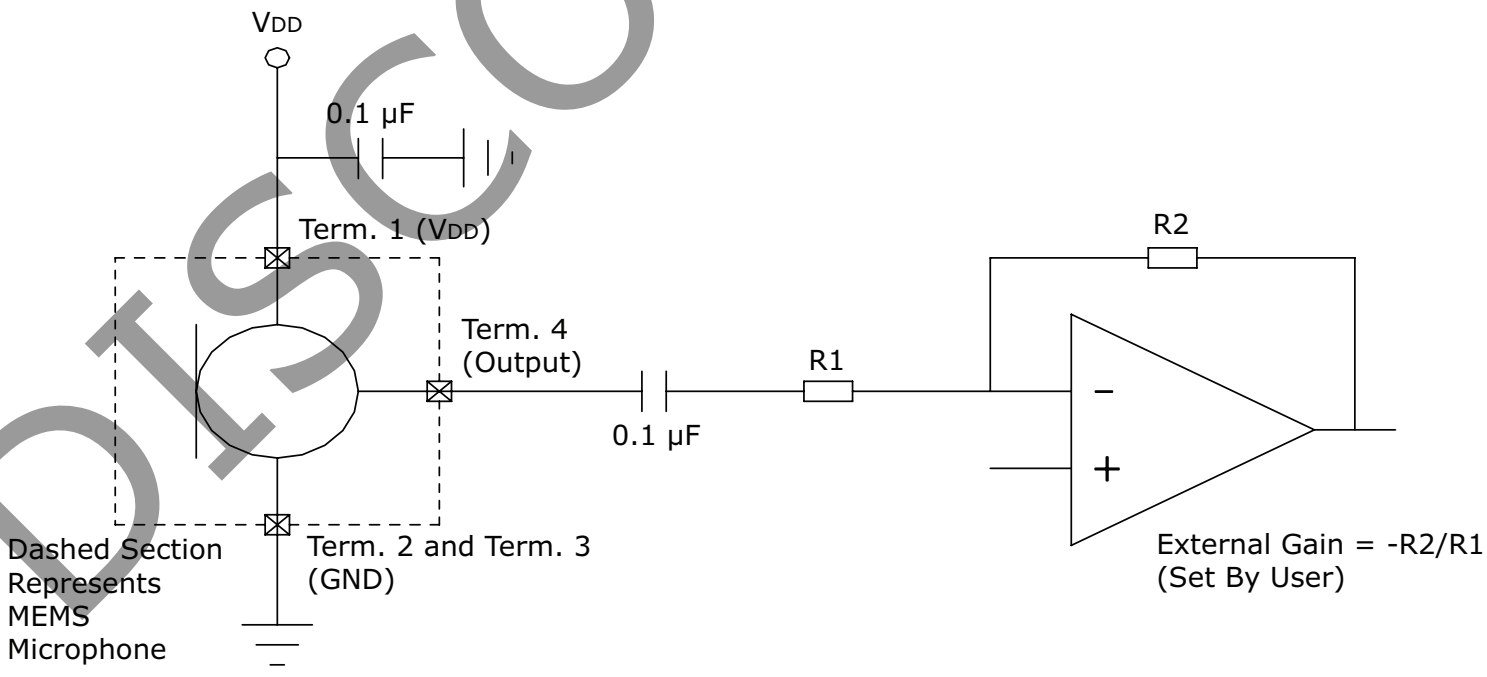


DISCONTINUED

## SOLDERABILITY

| parameter | conditions/description | min | typ | max | units |
|---|---|---|---|---|---|
| reflow soldering | see reflow profile | | | 260 | °C |

Note: 1. Vacuuming over acoustical hole is not allowed.
2. Not suitable for wash process.
3. Not recommended to exceed 5 reflow cycles.

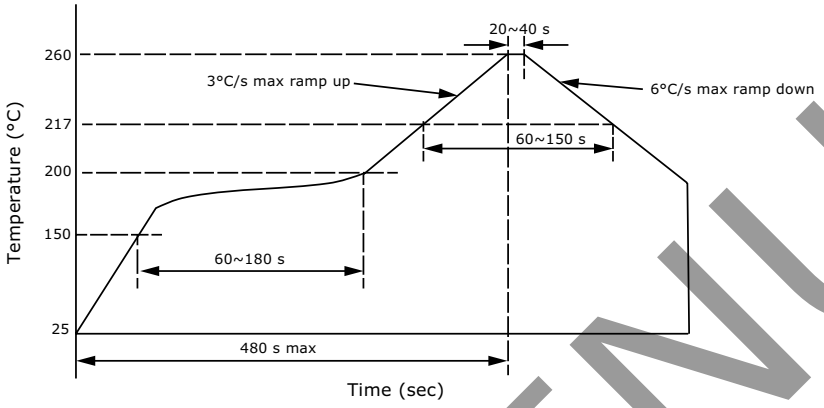


## PACKAGING

| parameter | conditions/description | min | typ | max | units |
|---|---|---|---|---|---|
| reel storage[4] | at relative humidity <75% | -40 | | 85 | °C |
| MSL | Class 1 | | | | |
| reel size | Ø170 mm max | | | | |
| reel QTY | 1,000 pcs per reel | | | | |

Note: 4. Recommended storage period no more than 1 year. Floor life (out of bag) no more than 4 weeks.

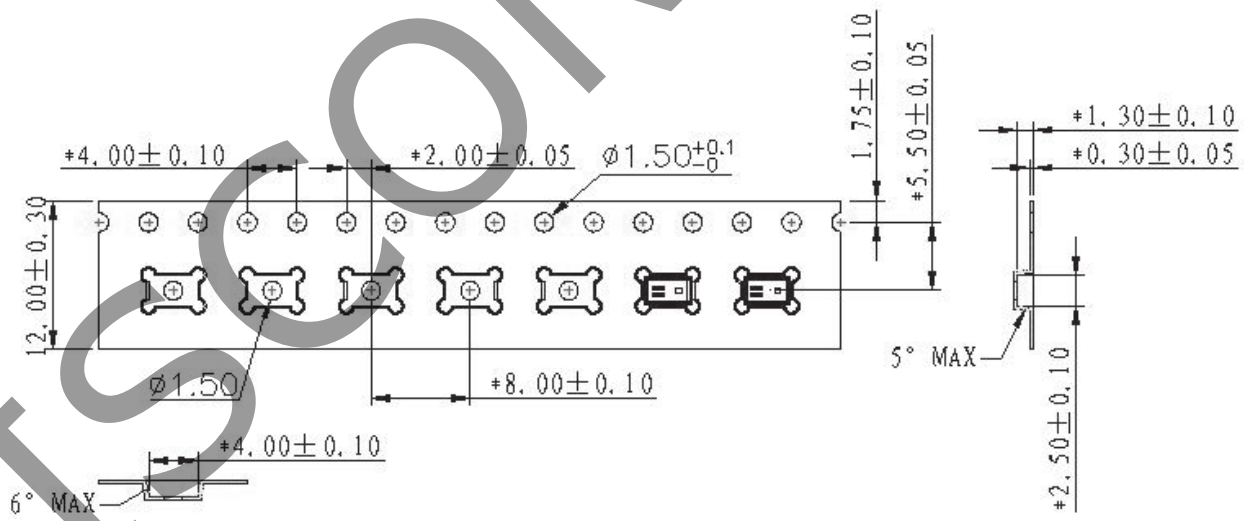


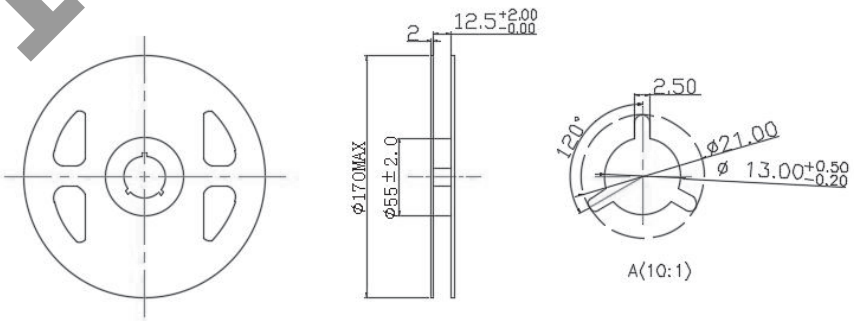


DISCONTINUED

## REVISION HISTORY

| rev. | description | date |
|---|---|---|
| 1.0 | initial release | 11/08/2018 |
| 1.01 | brand update | 01/15/2020 |

The revision history provided is for informational purposes only and is believed to be accurate.

DISCONTINUED



CUI Devices offers a one (1) year limited warranty. Complete warranty information is listed on our website.

CUI Devices reserves the right to make changes to the product at any time without notice. Information provided by CUI Devices is believed to be accurate and reliable. However, no responsibility is assumed by CUI Devices for its use, nor for any infringements of patents or other rights of third parties which may result from its use.

CUI Devices products are not authorized or warranted for use as critical components in equipment that requires an extremely high level of reliability. A critical component is any component of a life support device or system whose failure to perform can be reasonably expected to cause the failure of the life support device or system, or to affect its safety or effectiveness.