CUDEVICES

MODEL: CMM-4030DT-26164-TR | **DESCRIPTION:** MEMS MICROPHONE

FEATURES

- digital (PDM)
- top port
- reflow solder compatible
- omnidirectional

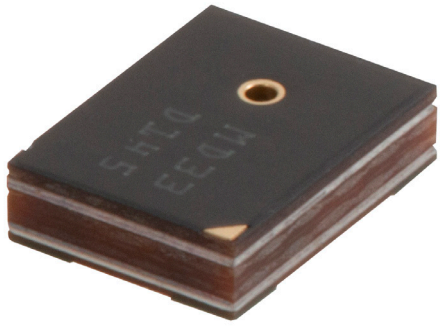

RoHS

ELECTRICAL

parameter	conditions/description	min	typ	max	units
directivity	omnidirectional				
sensitivity (S)	at 94 dB SPL, 1 kHz low-power mode standard mode	 -26 -27	 -25 -26	 -24 -25	 dB FS dB FS
supply voltage (V_{DD})		1.6	1.8	3.6	V
current consumption (I_{DD})	low-power mode: F_{CLOCK} = 768 kHz standard mode: F_{CLOCK} = 2.4 MHz		290 670		µA µA
frequency (f)		100		10,000	Hz
signal to noise ratio (S/N)	at 94 dB SPL, 1 kHz (A-weighted) low-power mode standard mode		 62 64		 dBA dBA
total harmonic distortion (THD)	at 94 dB SPL, 1 kHz, S = typ		0.1		%
acoustic overload point (AOP)	at 10% THD, 1 kHz, S = typ low-power mode standard mode		 120 120		 dB SPL dB SPL
power supply rejection ratio (PSSR)	200 mVp-p sine wave @ 1 kHz low-power mode standard mode		 50 50		 dB V/FS dB V/FS
power supply rejection (PSR)	100 mVp-p square wave @ 217 Hz (A-weighted) low-power mode standard mode		 -80 -80		 dB FS(A) dB FS(A)

DIGITAL INTERFACE

parameter	conditions/description	min	typ	max	units
clock frequency range	sleep mode low-power mode standard mode	0 150 1.1		50 900 4.0	kHz kHz MHz
sleep current (ISLEEP)	FCLOCK ≤ 50 kHz		1		µA
dc output	fullscale = ±100		4		%FS
data format	1/2 cycle PDM				
short circuit current (ISC)	grounded data pin	1		10	mA
output load (CLOAD)				200	pF
fall-asleep time	FCLOCK ≤ 50 kHz			30	µs
wake-up time	FCLOCK ≥ 151 kHz			200	µs
power-up time	V_{DD} ≥ V (min)		6	20	ms
mode-change time				10	ms
logic input high (VIH)		0.7xVDD		3.6	V
logic input low (VIL)		-0.3		0.3xVDD	V
logic output high (VOH)	IOUT = 2 mA	VDD-0.45			V
logic output low (VOL)	IOUT = 2 mA			0.45	V
clock duty cycle		40		60	%

Notes: 1. All specifications measured at 23±2°C, humidity at 55±20%, VDD = 1.8 V, FCLOCK = 2.4 MHz, L/R pin grounded, no load, unless otherwise noted.

TIMING CHARACTERISTICS

parameter	conditions/description	min	typ	max	units
clock rise/fall time	tEDGE			20	ns
delay time to high Z	tDZ			40	ns
delay time to data line driven	tDD			50	ns

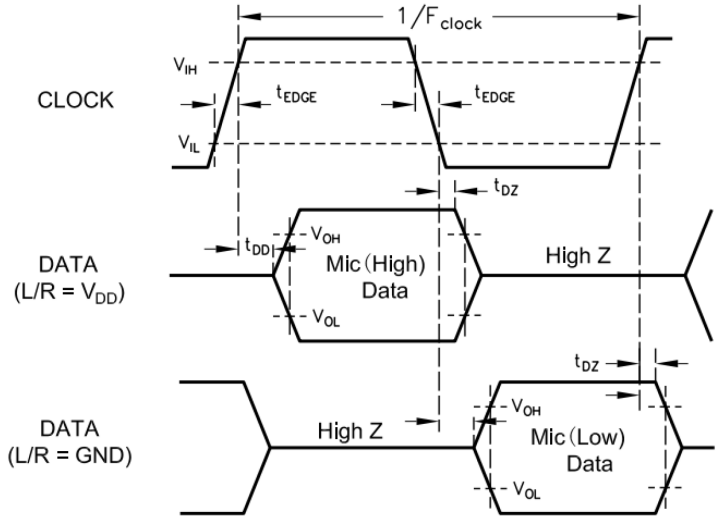

Microphone	Select (L/R)	Asserts Data On	Latch Data On
Mic (High)	VDD	rising clock edge	falling clock edge
Mic (Low)	GND	falling clock edge	rising clock edge

RECOMMENDED INTERFACE CIRCUIT

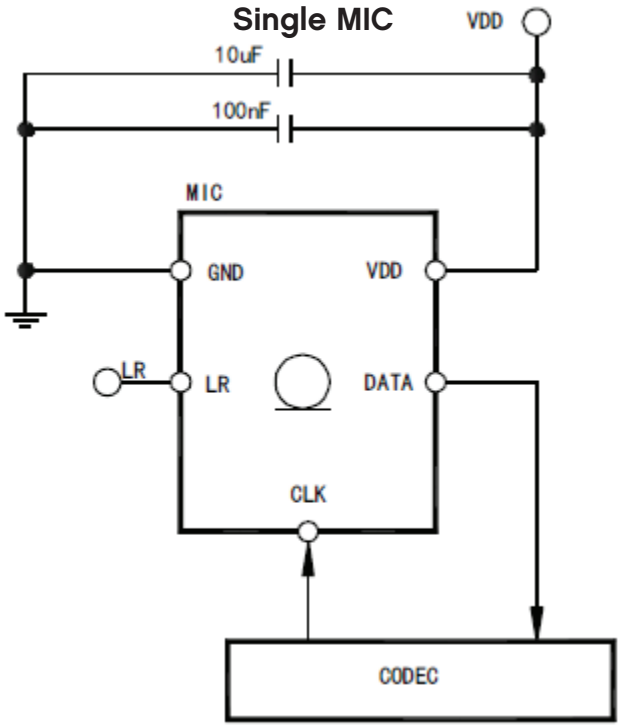

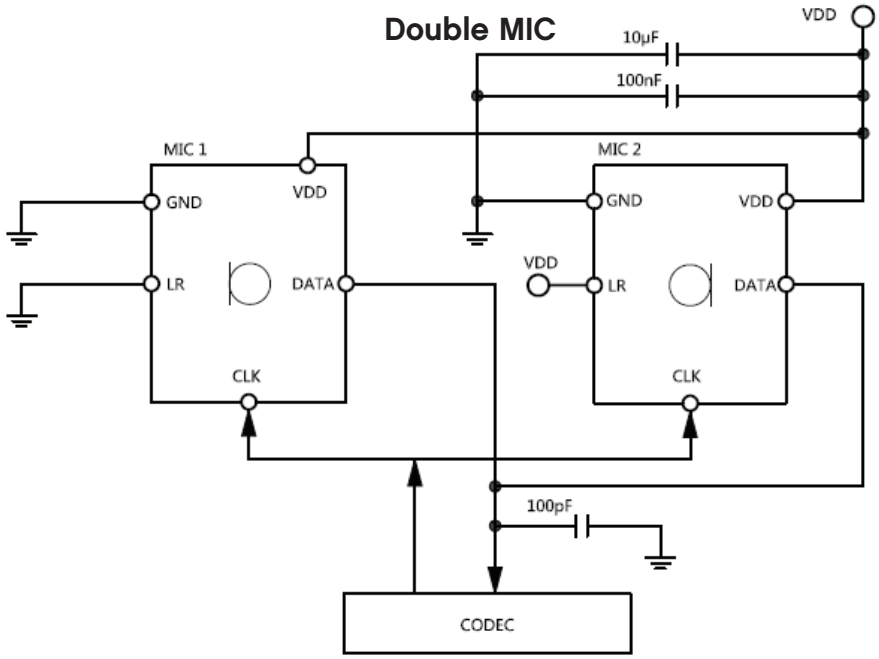

Notes: 2. Power supply decoupling capacitors (100 nF, 10 µF ceramic) should be placed as near as possible to V_{DD} of the device.

ENVIRONMENTAL

parameter	conditions/description	min	typ	max	units
operating temperature		-30		85	°C
storage temperature	in packaging	-40		100	°C
RoHS	yes				

MECHANICAL

parameter	conditions/description	min	typ	max	units
dimensions	4.00 x 3.00 x 1.00				mm
acoustic port	top				
terminals	surface mount				
weight			0.026		g

MECHANICAL DRAWING

units: mm
tolerance:
length, width, height: ±0.10 mm
acoustic port: ±0.05 mm
unless otherwise specified: ±0.15 mm

TERMINAL CONNECTIONS	
TERM.	FUNCTION
1	VDD
2	L/R
3	CLOCK
4	DATA
5~8	GND

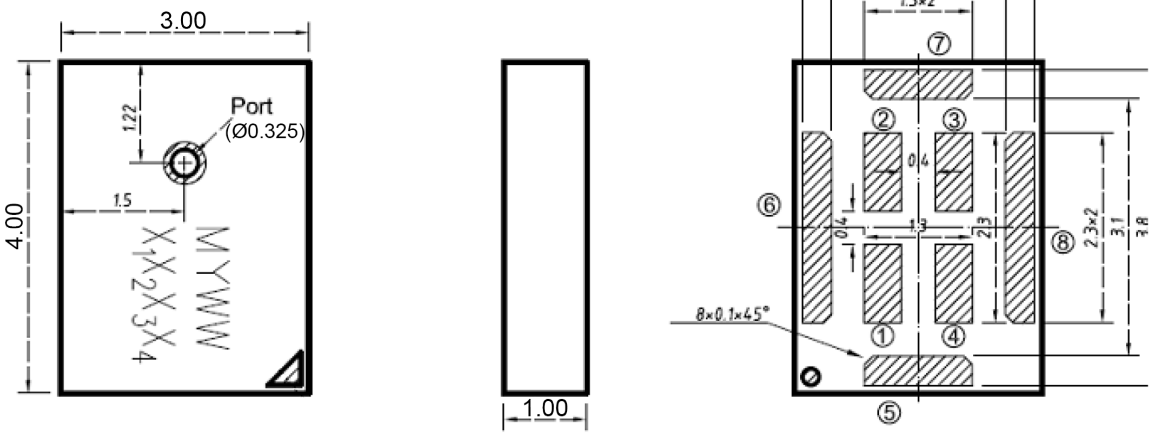

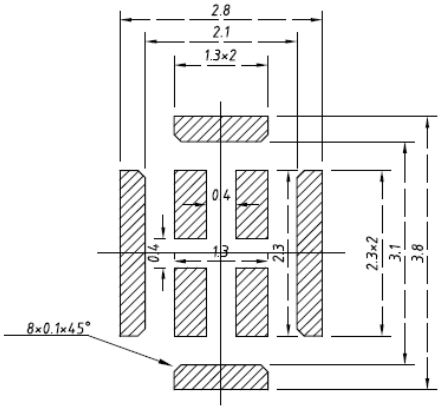

Recommended PCB Layout
Top View

FREQUENCY RESPONSE CURVE

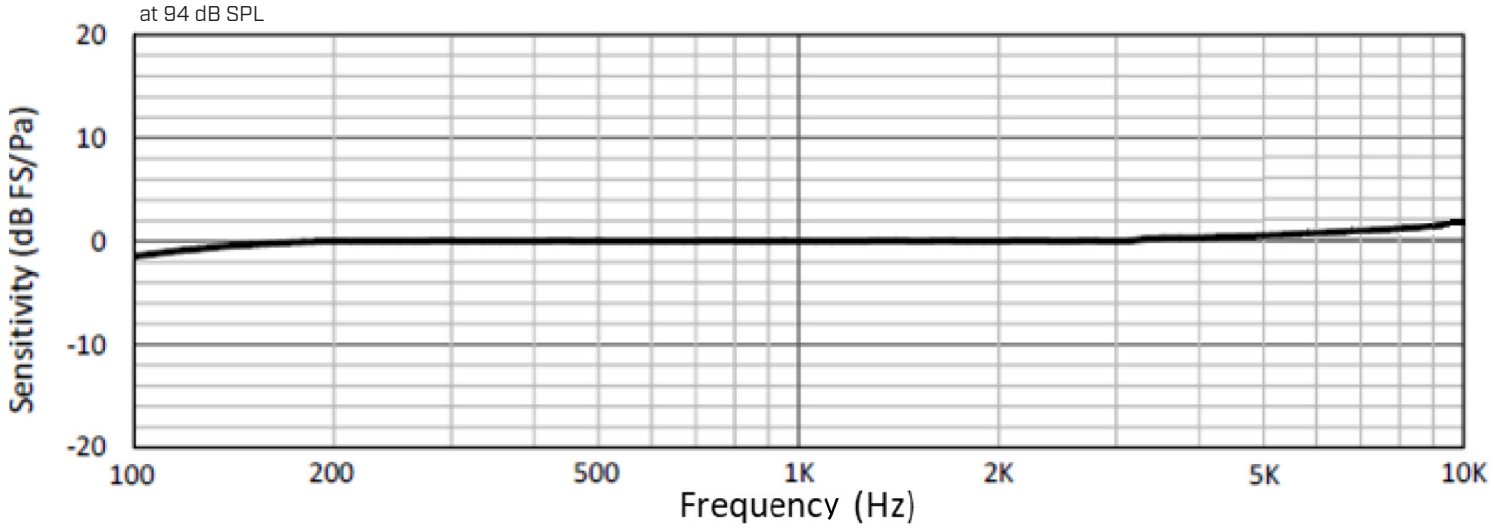

SOLDERABILITY

parameter	conditions/description	min	typ	max	units
reflow soldering[3]	see reflow profile			260	°C

Note: 3. Not recommended to exceed 3 reflow cycles.

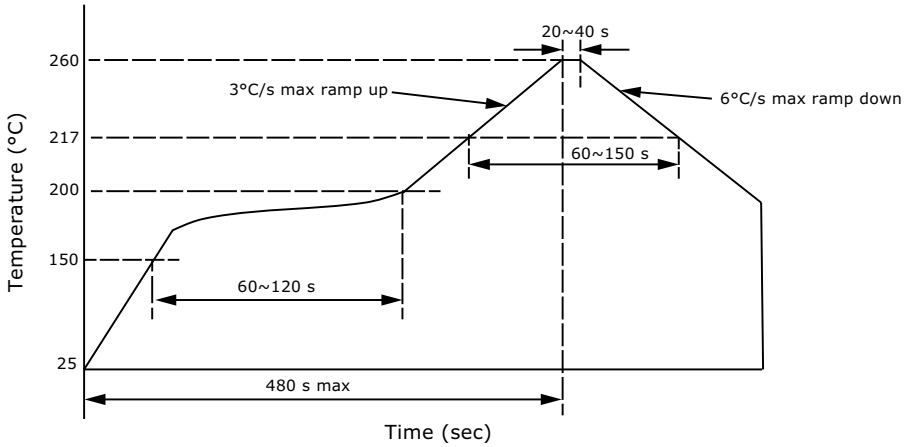

HANDLING RECOMMENDATIONS

1. Not recommended to blow air heavily over acoustic port as debris could impact mic function.
2. Not suitable for wash process after reflow.
3. Not recommended to brush board with or without solvents after reflow process.
4. Not recommended to directly expose to ultrasonic processing or cleaning.
5. Not recommended to inserty any object in port of device at any time.
6. Not recommended to apply over 30 psi of air pressure into the port hole.
7. Not recommended to pull a vacuum over port hole.
8. Not recommended to apply a vacuum when repackaging into sealed bag a rate faster than 0.5 atm/sec.
9. Not recommended to clean table or carried plate with air guarding system that could induce particle floating inside mic.

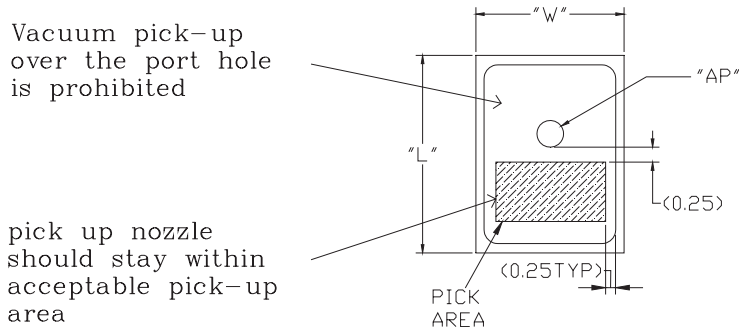

Recommended Vacuum Nozzle Pickup
Top View

PACKAGING

parameter	conditions/description	min	typ	max	units
MSL	Class 1				
reel size	Ø7 inches				
reel QTY[4]	1,100 pcs per reel				
carton size	310 x 210 x 165 mm				
carton QTY	5,500 pcs				

Note: 4. The leader tape of the reel, and the beginning tape fixed into the reel center, will leave 25 blank cavities each.

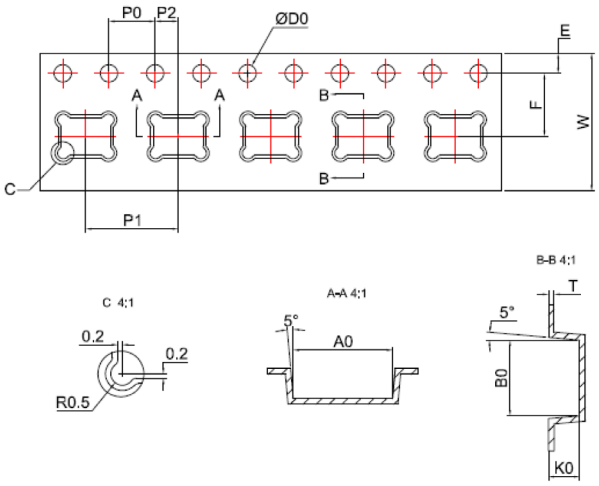

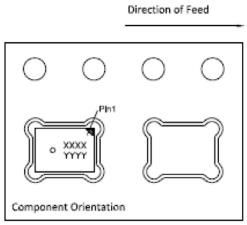

Item	W	E	F	ØD0	K0
DIM(mm)	12.0±0.30	1.75±0.10	5.50±0.10	1.50+0.10/-0	1.35±0.10
Item	P0	10P0	P1	A0	B0
DIM(mm)	4.0±0.10	40.0±0.20	8.0±0.10	4.30±0.10	3.30±0.10
Item	P2	T	--	--	--
DIM(mm)	2.0±0.10	0.25±0.05	--	--	--

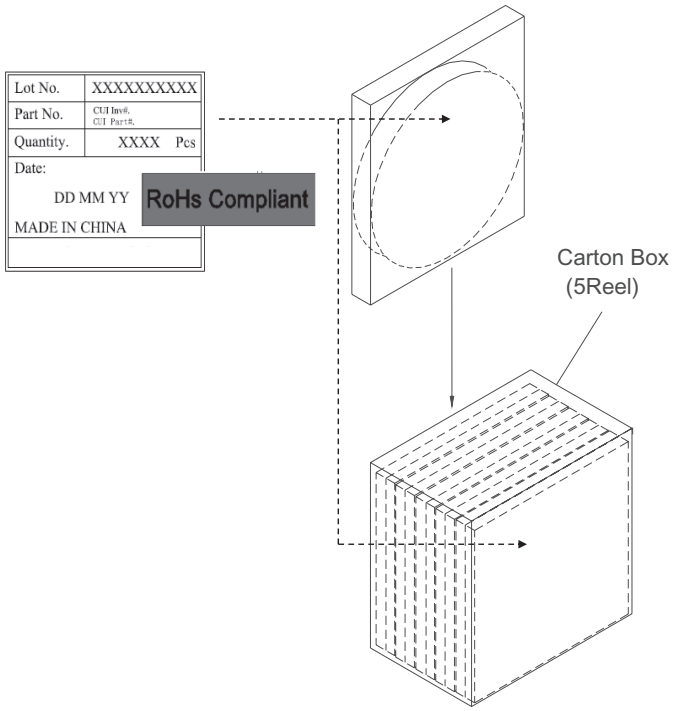

REVISION HISTORY

rev.	description	date
1.0	initial release	03/09/2022
1.01	logo, datasheet style update	08/05/2022

The revision history provided is for informational purposes only and is believed to be accurate.

CUI Devices offers a one (1) year limited warranty. Complete warranty information is listed on our website.

CUI Devices reserves the right to make changes to the product at any time without notice. Information provided by CUI Devices is believed to be accurate and reliable. However, no responsibility is assumed by CUI Devices for its use, nor for any infringements of patents or other rights of third parties which may result from its use.

CUI Devices products are not authorized or warranted for use as critical components in equipment that requires an extremely high level of reliability. A critical component is any component of a life support device or system whose failure to perform can be reasonably expected to cause the failure of the life support device or system, or to affect its safety or effectiveness.

cuidevices.com