CUDEVICES

MODEL: CMM-4030DT-26165-TR | **DESCRIPTION:** MEMS MICROPHONE

FEATURES

- digital (PDM)
- top port
- reflow solder compatible
- omnidirectional

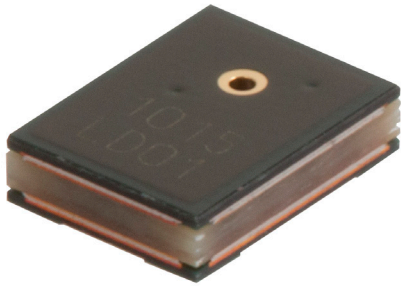

RoHS

ELECTRICAL

parameter	conditions/description	min	typ	max	units
directivity	omnidirectional				
sensitivity (S)	at 1 kHz, 1 V/Pa	-27	-26	-25	dB FS
supply voltage (V_{DD})		1.6	1.8	3.6	V
current consumption (I_{DD})	standby: 1.6~3.6 V input, clock off operating: 1.6~3.6 V input, no load on DATA		 650	5 850	µA µA
frequency (f)		100		10,000	Hz
signal to noise ratio (S/N)	at 1 kHz, 1 V/Pa		65		dBA
total harmonic distortion (THD)	at 100 dB SPL, 1 kHz at 115 dB SPL, 1 kHz		0.2 0.5	0.5 1.0	% %
acoustic overload point (AOP)	at 10% THD, 1 kHz, S = typ		120		dB SPL
power supply rejection (PSR)	100 mVp-p square wave @ 217 Hz (A-weighted)		-85		dB FS(A)

DIGITAL INTERFACE

parameter	conditions/description	min	typ	max	units
clock frequency range		1.024	2.048	3.072	MHz
data format	1/2 cycle PDM				
short circuit current (I_{SC})	at 1 kHz, 1 V/Pa	1		10	mA
output load (C_{LOAD})				100	pF
Lid to ground resistance				100	Ω
logic input high (V_{IH})		0.75xV_{DD}			V
logic input low (V_{IL})				0.25xV_{DD}	V
logic output high (V_{OH})		V_{DD}x0.9			V
logic output low (V_{OL})				V_{DD}x0.1	V
clock duty cycle		40	50	60	%

Notes: 1. All specifications measured at 25°C, humidity at 50±20%, V_{DD} = 1.8 V, F_{CLOCK} = 2.048 MHz, duty cycle = 50%, no load, input SPL = 94 dB SPL at 1 kHz, unless otherwise noted.

TIMING CHARACTERISTICS

parameter	conditions/description	min	typ	max	units
clock rising time (T_R)	R_L=1 MΩ, C_L=12 pF			10	ns
clock falling time (T_F)	R_L=1 MΩ, C_L=12 pF			10	ns
DATA into high Z time (T_Z)	R_L=1 MΩ, C_L=12 pF			15	ns
DATA valid time (T_V)	R_L=1 MΩ, C_L=12 pF	18		40	ns
clock jitter	period jitter in RMS			0.5	ns

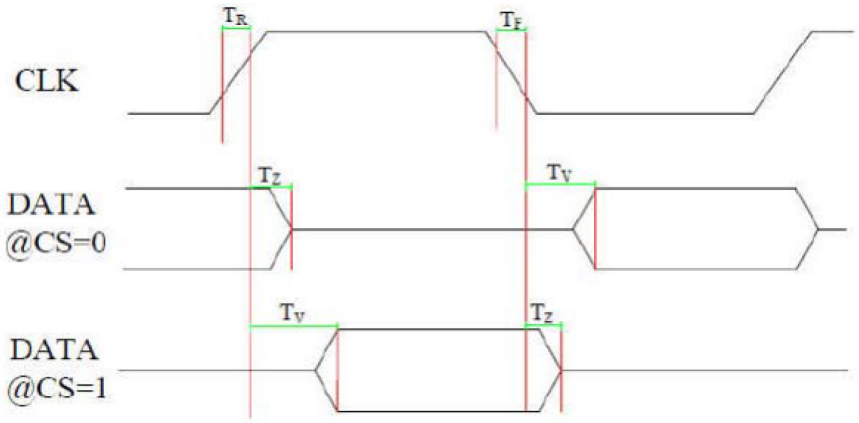

Notes: 2. For one-microphone application, the DATA waveform will be @ CS (select)=0
3. For two-microphone application, system needs to set CS (select)=0 and 1 for two microphones respectively.

RECOMMENDED INTERFACE CIRCUIT

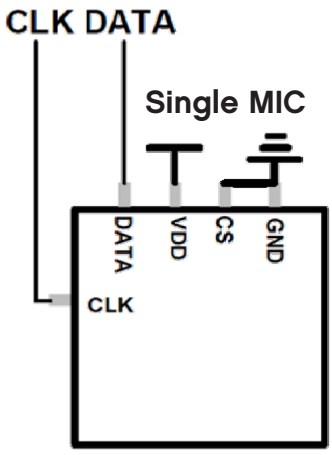

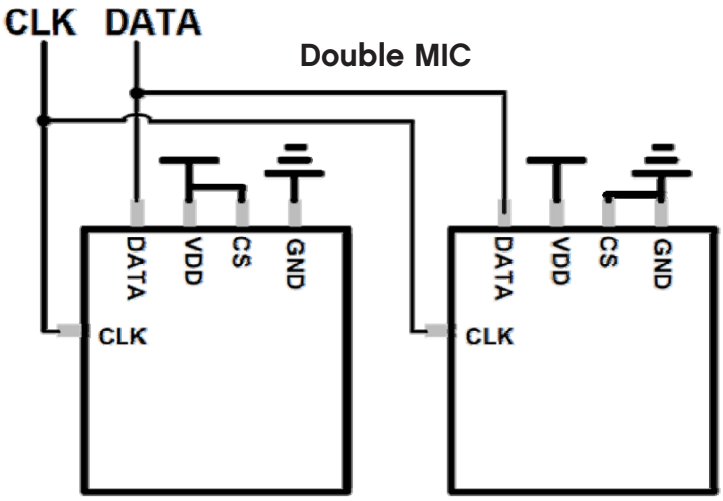

OUTPUT PDM DATA

The output format of CMM-4030DT-26165-TR is 1-bit PDM. Oversampling ratio is 64 in typical case. It is comprised of low frequency input signal and high frequency out of band noise. To convert bit PDM into PCM format, a low pass filter is required to remove the out of band noise. This can be done by several 3 parties CODEC or Fortemedia's voice processing chip. If input voltage is in the mid-level, the output will change alternatively between "zero" and "one". If input voltage is
higher than mid-level, the output data stream will contain more "ones" than "zeros".

POWER DOWN MECHANISM

CMM-4030DT-26165-TR will begin to operate when clock applied. It will enter power down mode when clock stops
(no matter stops at high or low). Recommended minimum operation dock frequency is 1.024 MHz to avoid any un-wanted malfunction.

Notes: 4. Power supply decoupling capacitors (100 nF, 10 µF ceramic) should be placed as near as possible to V_{DD} of the device.

ENVIRONMENTAL

parameter	conditions/description	min	typ	max	units
operating temperature		-30		85	°C
storage temperature	in packaging	-40		100	°C
RoHS	yes				

MECHANICAL

parameter	conditions/description	min	typ	max	units
dimensions	4.00 x 3.00 x 1.00				mm
acoustic port	top				
terminals	surface mount				
weight			0.03		g

MECHANICAL DRAWING

units: mm
tolerance:
length, width, height: ±0.10 mm
acoustic port: ±0.10 mm
unless otherwise specified: ±0.15 mm

TERMINAL CONNECTIONS	
TERM.	FUNCTION
1	VDD
2	SELECT
3	CLOCK
4	DATA
5~8	GND

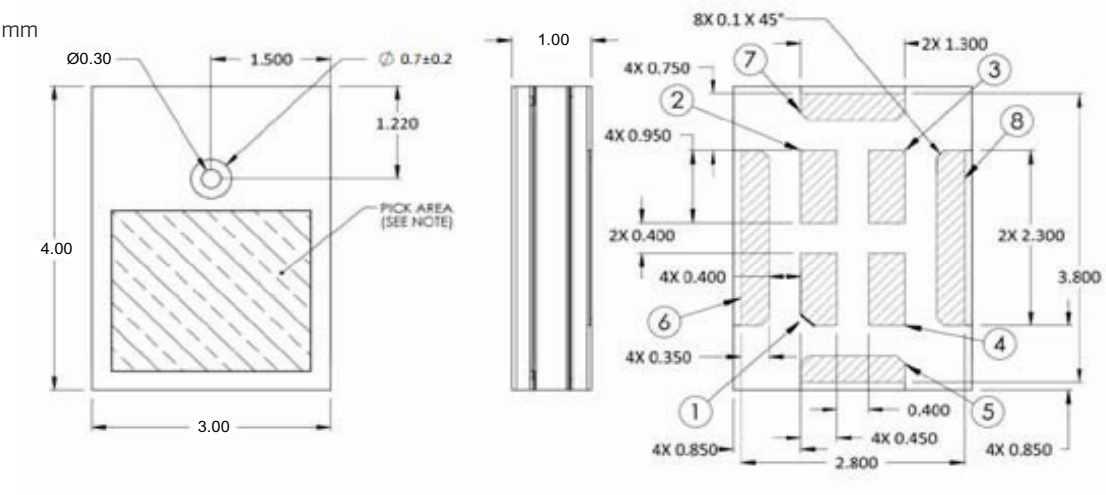

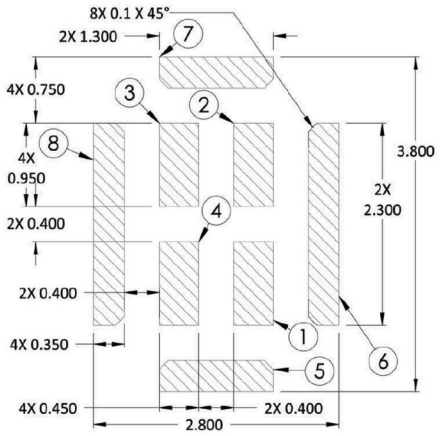

Recommended PCB Layout
Top View

FREQUENCY RESPONSE CURVE

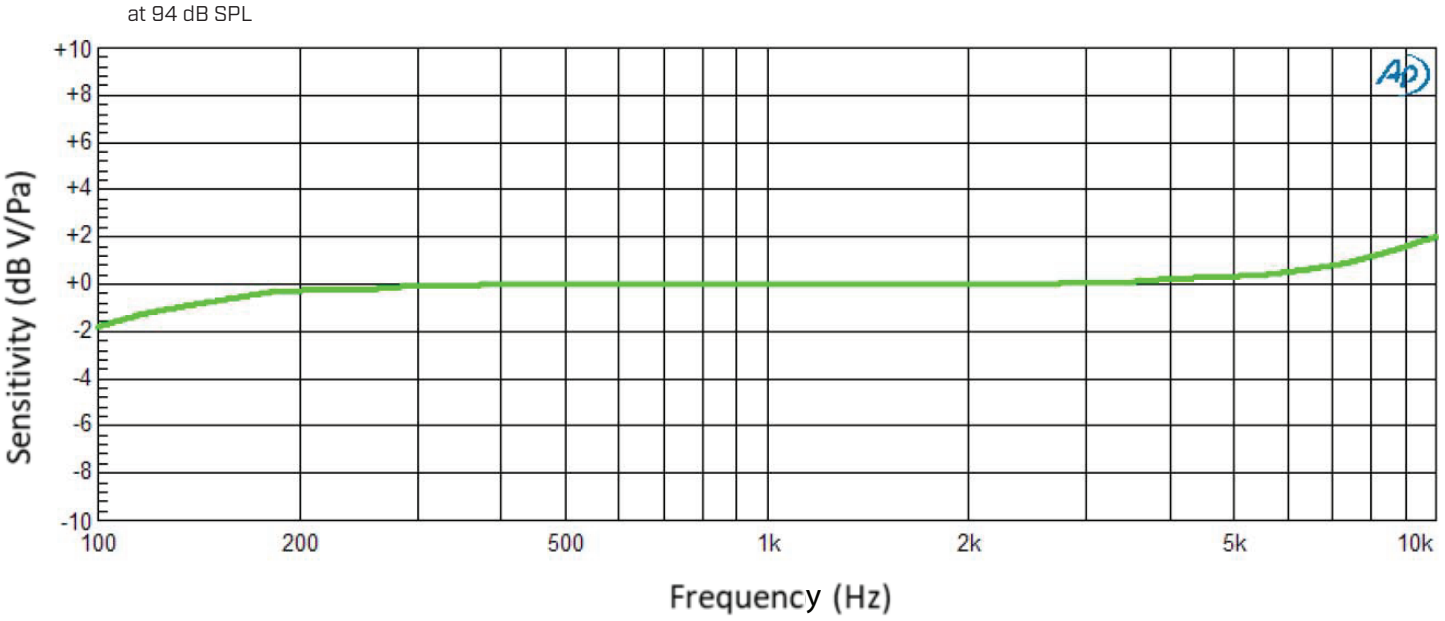

SOLDERABILITY

parameter	conditions/description	min	typ	max	units
reflow soldering[5]	see reflow profile			260	°C

Note: 5. Not recommended to exceed 3 reflow cycles.

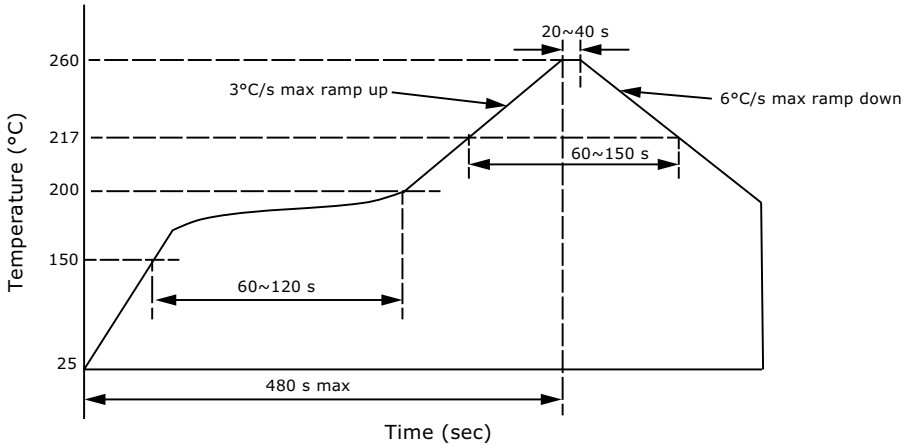

HANDLING RECOMMENDATIONS

1. Not recommended to blow air heavily over acoustic port as debris could impact mic function.
2. Not suitable for wash process after reflow.
3. Not recommended to brush board with or without solvents after reflow process.
4. Not recommended to directly expose to ultrasonic processing or cleaning.
5. Not recommended to inserty any object in port of device at any time.
6. Not recommended to apply over 30 psi of air pressure into the port hole.
7. Not recommended to pull a vacuum over port hole.
8. Not recommended to apply a vacuum when repackaging into sealed bag a rate faster than 0.5 atm/sec.
9. Not recommended to clean table or carried plate with air guarding system that could induce particle floating inside mic.

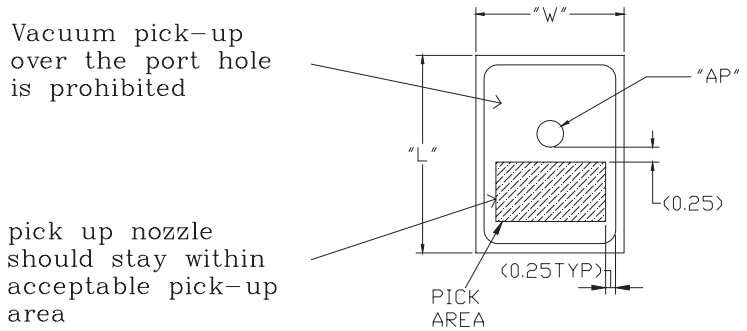

Recommended Vacuum Nozzle Pickup
Top View

PACKAGING

parameter	conditions/description	min	typ	max	units
MSL	Class 1				
reel size	Ø7 inches				
reel QTY[6]	1,100 pcs per reel				
carton size	310 x 210 x 165 mm				
carton QTY	5,500 pcs				

Note: 6. The leader tape of the reel, and the beginning tape fixed into the reel center, will leave 25 blank cavities each.

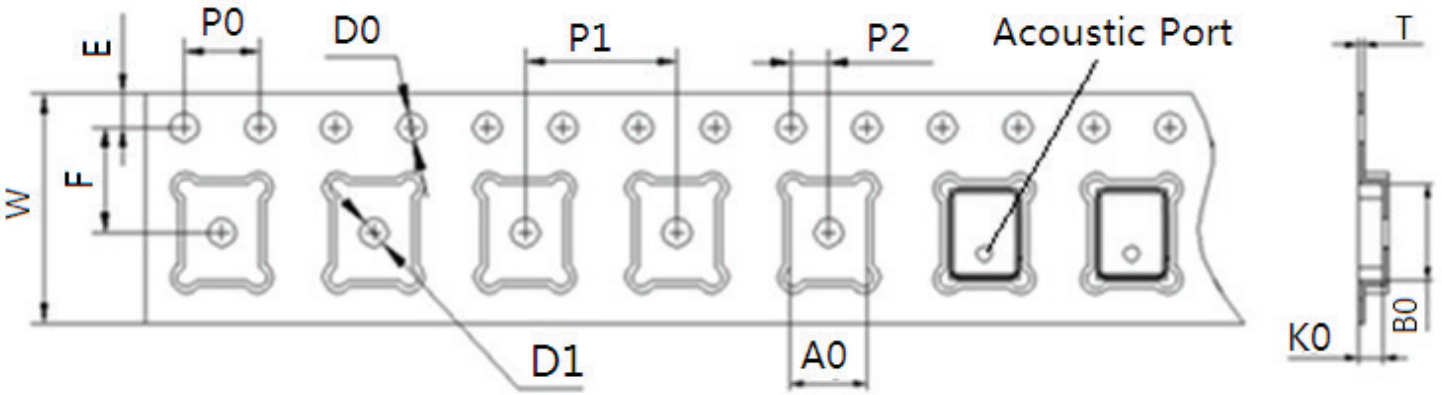

Item	W	E	F	ØD0	K0	P0
DIM(mm)	12.0±0.30	1.75±0.10	5.50±0.10	1.50+0.10/-0	1.20±0.10	4.0±0.10
Item	P1	A0	B0	P2	T	D1
DIM(mm)	8.0±0.10	3.30±0.10	4.30±0.10	2.0±0.10	0.30±0.05	1.50+0.1

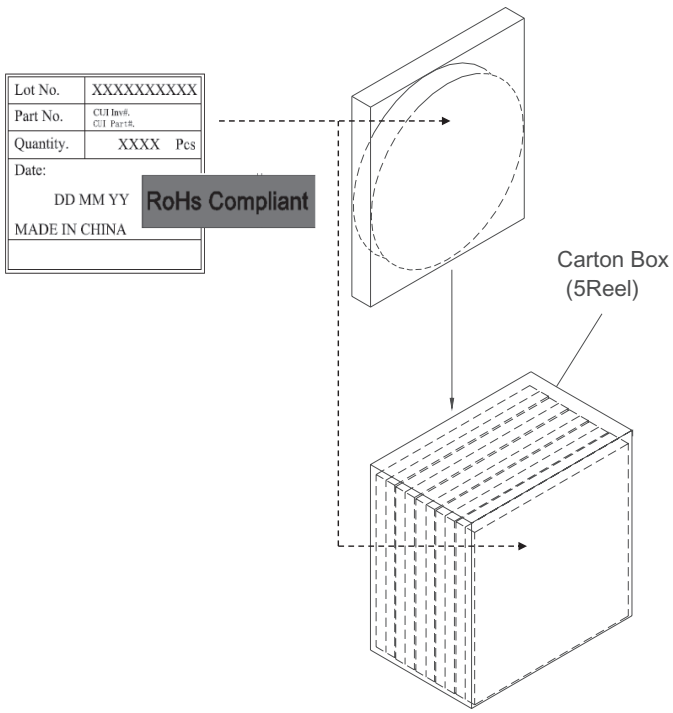

REVISION HISTORY

rev.	description	date
1.0	initial release	03/10/2022
1.01	logo, datasheet style update	08/05/2022

The revision history provided is for informational purposes only and is believed to be accurate.

CUI Devices offers a one (1) year limited warranty. Complete warranty information is listed on our website.

CUI Devices reserves the right to make changes to the product at any time without notice. Information provided by CUI Devices is believed to be accurate and reliable. However, no responsibility is assumed by CUI Devices for its use, nor for any infringements of patents or other rights of third parties which may result from its use.

CUI Devices products are not authorized or warranted for use as critical components in equipment that requires an extremely high level of reliability. A critical component is any component of a life support device or system whose failure to perform can be reasonably expected to cause the failure of the life support device or system, or to affect its safety or effectiveness.

cuidevices.com