CUDEVICES

MODEL: CMR-4015-44-SP | **DESCRIPTION:** ELECTRET CONDENSER MICROPHONE

FEATURES

- noise cancelling
- 4 mm diameter
- solder pad



RoHS

SPECIFICATIONS

parameter	conditions/description	min	typ	max	units
directivity	noise cancelling				
sensitivity (S)	at 1 kHz, 0 dB = 1 V/Pa	-47	-44	-41	dB
standard operating voltage (Vs)		1.0		5.0	V
current consumption (IDSS)	Vs = 2.0 Vdc, RL = 2.2 kΩ			500	µA
sensitivity reduction (ΔS-Vs)	Vs = 2.0 ~ 1.5 Vdc			-3	dB
frequency (f)		100		10,000	Hz
signal to noise ratio (S/N)	f = 1 kHz, A-weighted	55			dBA
total harmonic distortion (THD)	at 94 dB SPL, 1 kHz			1	%
acoustic overload point (AOP)				120	dB SPL
output impedance (Zout)	f = 1 kHz			2.2	kΩ
dimensions	Ø4.0 x 1.5				mm
material	Al-Mg alloy				
terminal	solder pads				
weight			0.07		g
operating temperature		-40		85	°C
storage temperature		-40		85	°C
RoHS	yes				

Notes:
1. We use the "Pascal (Pa)" indication of sensitivity as per the recomendation of I.E.C. (International Electrotechnical Commission). The sensitivity of "Pa" will increase 20 dB compared to the "ubar" indication. Example: -60 dB (0 dB = 1 V/ubar) = -40 dB (1V/Pa)
2. All specifications measured at 20±2°C, humidity at 65±5%, unless otherwise noted.

SOLDERABILITY

parameter	conditions/description	min	typ	max	units
hand soldering	for 1~2 seconds			320	°C

MECHANICAL DRAWING

units: mm

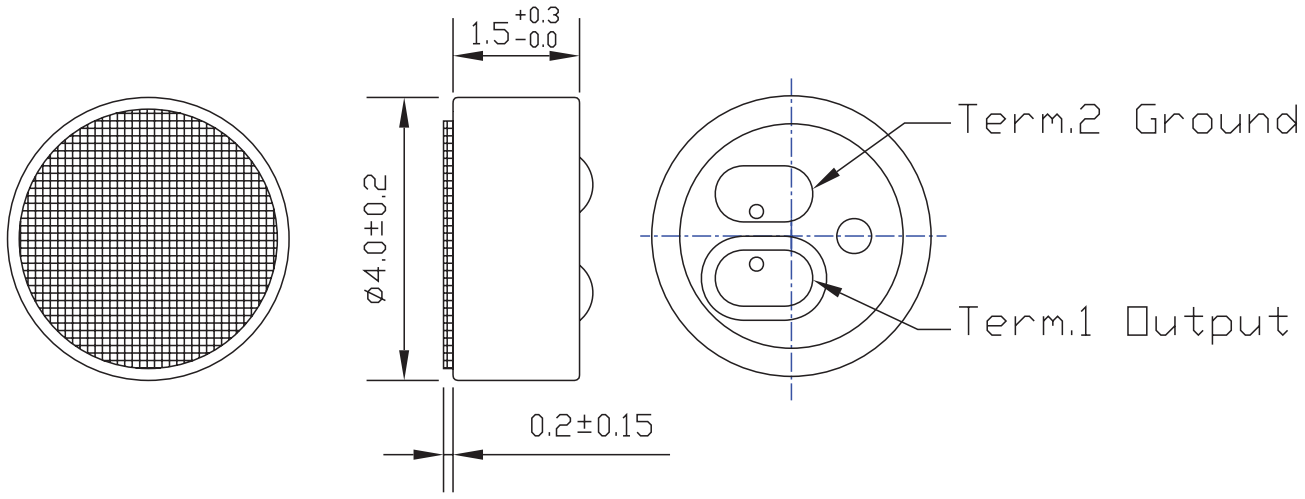

FREQUENCY RESPONSE CURVE

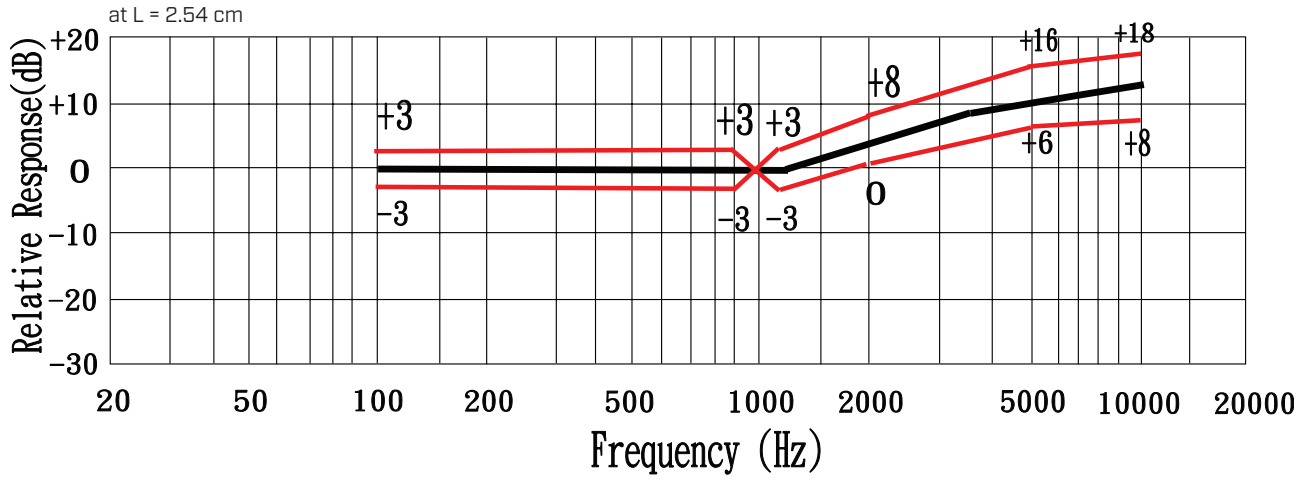

APPLICATION CIRCUIT

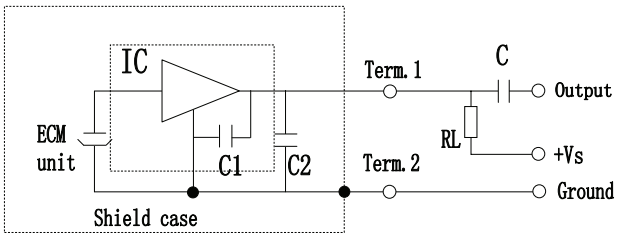

RL = 2.2 kΩ Vs=2.0 V C2=33 pF
C = 1 µF C1=10 pF

PACKAGING

units: mm

Anti-Static Bag: 100 x 100 x 2 mm
Inner Box Size: 205 x 105 x 50 mm
Outer Box Size: 550 x 230 x 235 mm
Small Box QTY: 100 pcs per box
Inner Box QTY: 1,000 pcs per box
Outer Box QTY: 30,000 pcs per box

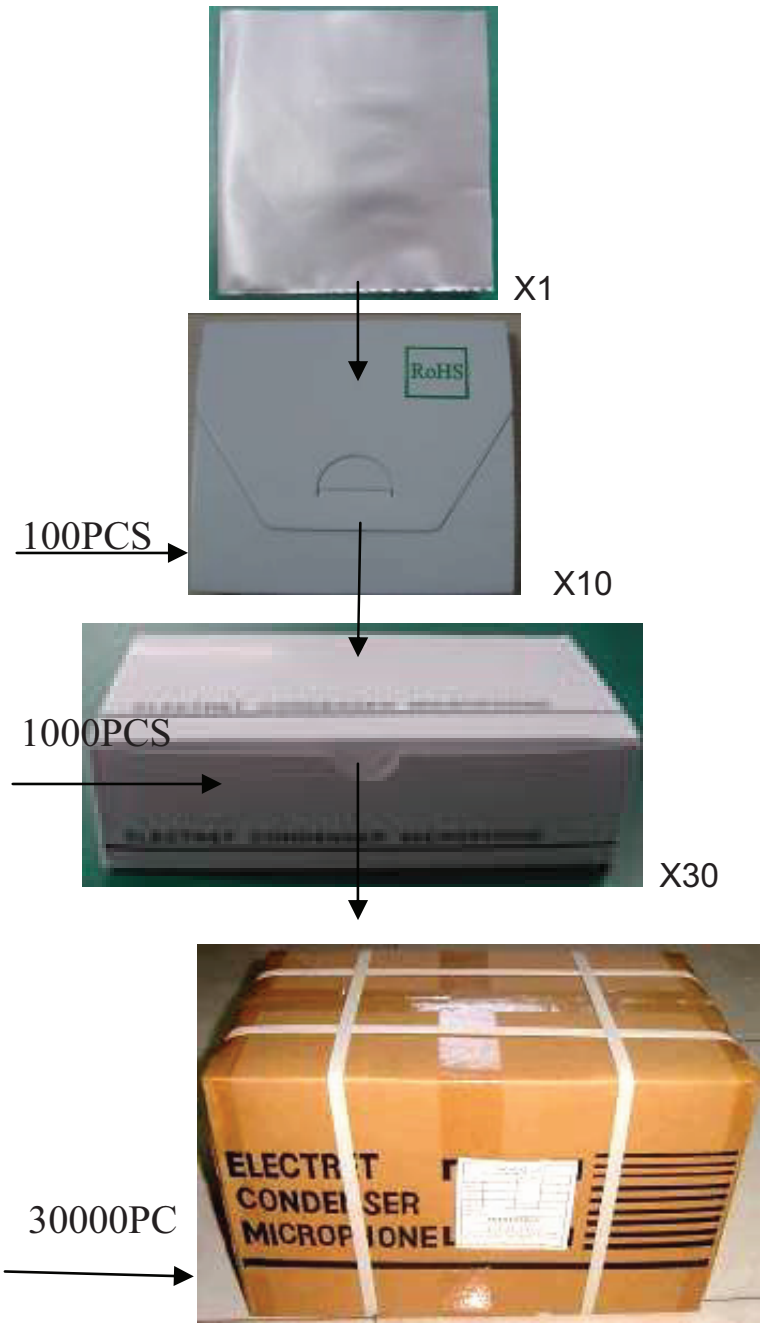

REVISION HISTORY

rev.	description	date
1.0	initial release	08/29/2022

The revision history provided is for informational purposes only and is believed to be accurate.

CUI Devices offers a one (1) year limited warranty. Complete warranty information is listed on our website.

CUI Devices reserves the right to make changes to the product at any time without notice. Information provided by CUI Devices is believed to be accurate and reliable. However, no responsibility is assumed by CUI Devices for its use, nor for any infringements of patents or other rights of third parties which may result from its use.

CUI Devices products are not authorized or warranted for use as critical components in equipment that requires an extremely high level of reliability. A critical component is any component of a life support device or system whose failure to perform can be reasonably expected to cause the failure of the life support device or system, or to affect its safety or effectiveness.

cuidevices.com