CUDEVICES

MODEL: CMS-151103-18S-X8 | **DESCRIPTION:** SPEAKER

FEATURES

- IPX8 rated
- rated 1.0 W
- 8 Ω



RoHS IPX8

SPECIFICATIONS

parameter	conditions/description	min	typ	max	units
input power	max power: as per IEC-268-5, in 1 cc box		1.0	1.3	W
impedance	at 2.0 kHz, 2.83 Vrms	6.8	8	9.2	Ω
coil resistance		6.48	7.2	7.92	Ω
resonant frequency (Fo)	at 2.83 Vrms, 10 cm in 1 cc box	760	950	1,140	Hz
frequency response		Fo		20,000	Hz
sound pressure level	at 2.83 Vrms, 10 cm, avg 0.8, 1.0, 1.5, 2.0 kHz, 1 cc box	92	95	98	dB
distortion	at 2.0 kHz, 2.83 Vrms, 10 cm			10	%
buzz, rattle, etc.	must be normal at sine wave, 0.2~ 2 kHz in 1 cc box			2.83	V
polarity	cone moves forward w/ positive dc current to “+” terminal				
dimensions	15 x 11 x 3.0				mm
magnet	Nd-Fe-B				
frame material	PPA				
cone material	PEEK				
terminal	spring contacts				
weight			1.5		g
operating temperature		-20		70	°C
storage temperature		-40		85	°C
RoHS	yes				
IP level	IPX8 (front side)				

Notes: 1. All specifications measured at 15~35°C, humidity at 25~75%, under 86~106 kPa pressure, unless otherwise noted.

MECHANICAL DRAWING

units: mm
tolerance: ±0.2 mm

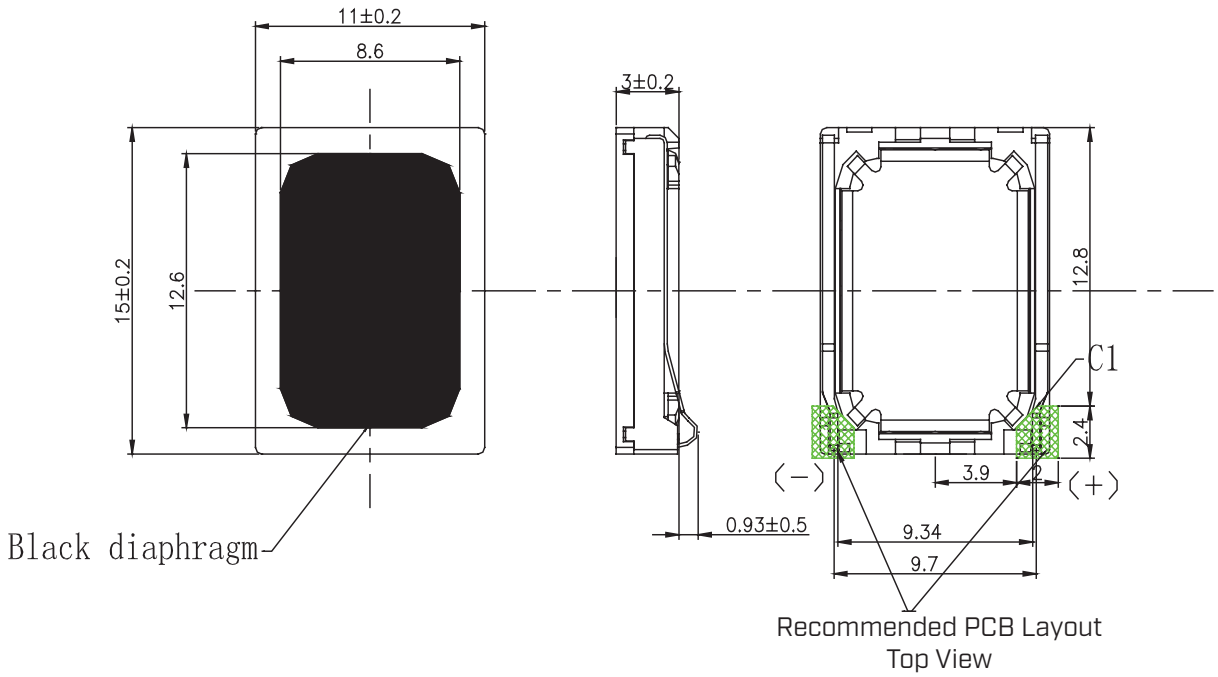

RESPONSE CURVES

Frequency Response Curve

Test Conditions: 2.83 Vrms / 10 cm in 1 cc box

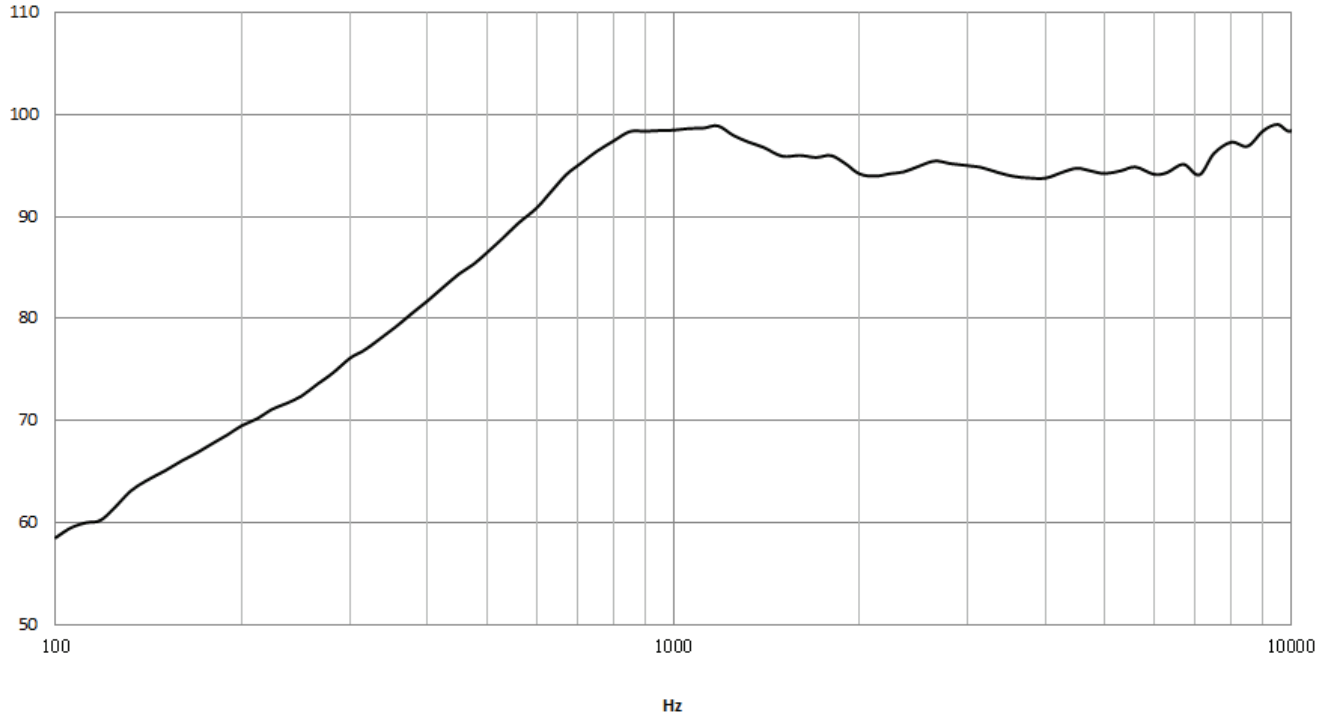

Total Harmonic Distortion Curve

Test Conditions: 2.83 Vrms / 10 cm in 1 cc box

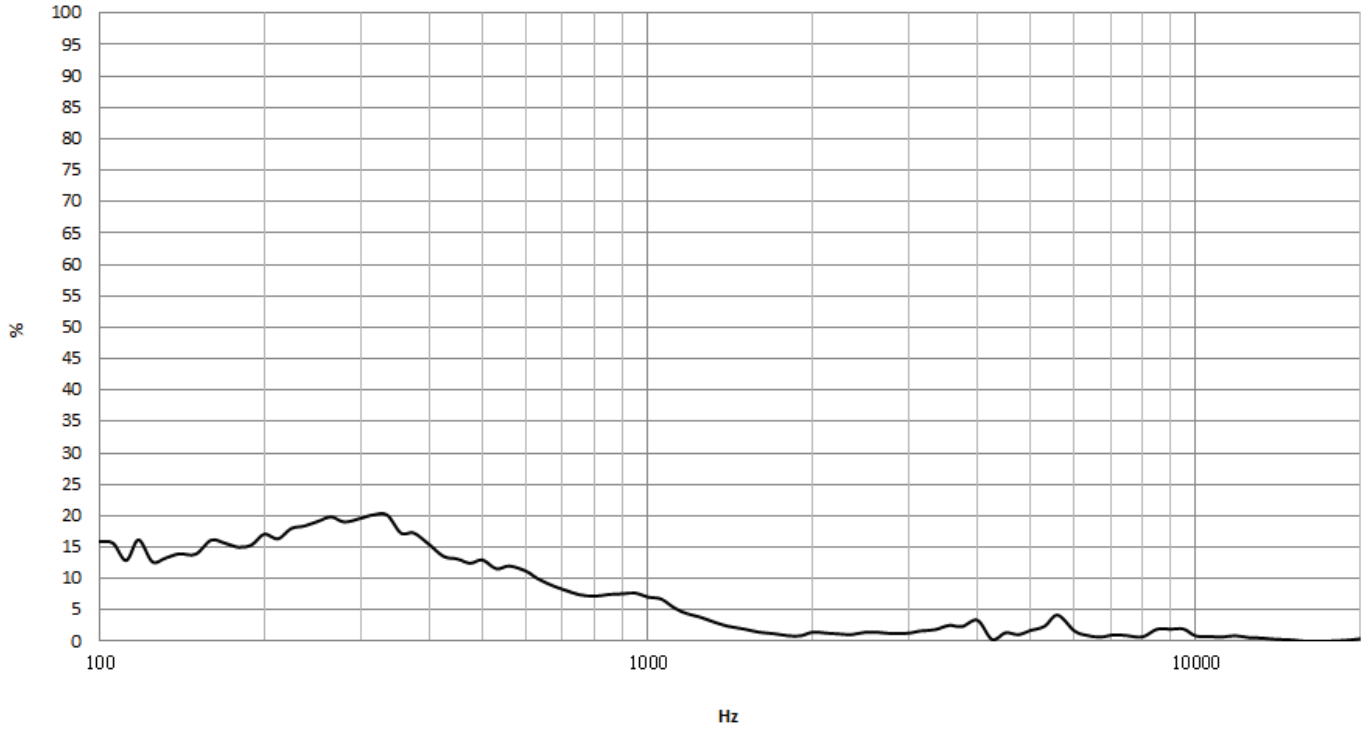

PACKAGING

units: mm

Tray QTY: 100 pcs per tray
Carton Size: 470 x 300 x 310 mm
Carton QTY: 5,000 pcs per carton

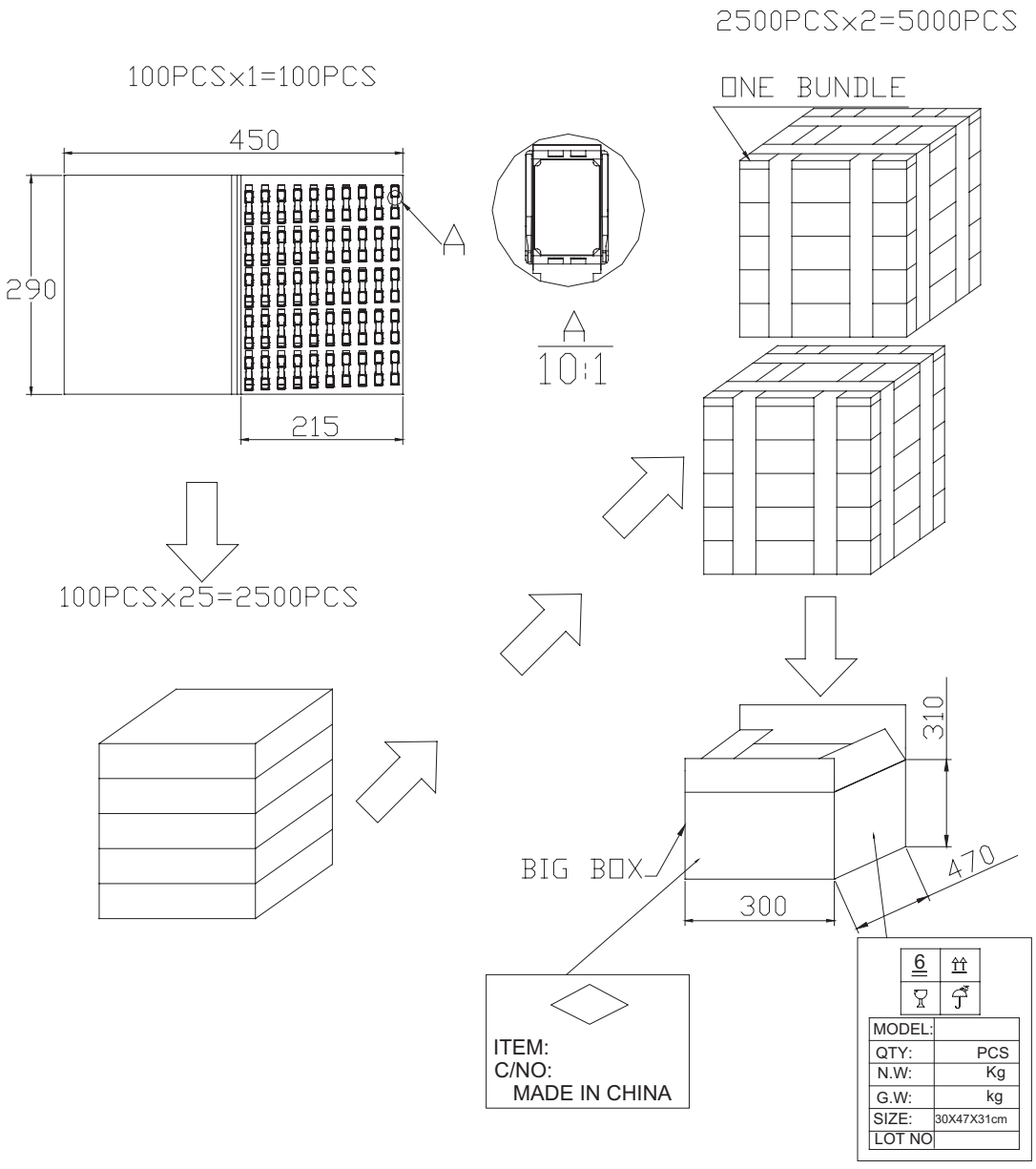

REVISION HISTORY

rev.	description	date
1.0	initial release	03/22/2023

The revision history provided is for informational purposes only and is believed to be accurate.

CUI Devices offers a one (1) year limited warranty. Complete warranty information is listed on our website.

CUI Devices reserves the right to make changes to the product at any time without notice. Information provided by CUI Devices is believed to be accurate and reliable. However, no responsibility is assumed by CUI Devices for its use, nor for any infringements of patents or other rights of third parties which may result from its use.

CUI Devices products are not authorized or warranted for use as critical components in equipment that requires an extremely high level of reliability. A critical component is any component of a life support device or system whose failure to perform can be reasonably expected to cause the failure of the life support device or system, or to affect its safety or effectiveness.

cuidevices.com