CUDEVICES



# **SERIES:** CMS-151135-078X | **DESCRIPTION:** SPEAKER

### FEATURES

- micro-speaker
- 8 Ω impedance
- rated 0.7 W
- 5 available termination options



RoHS

## SPECIFICATIONS

| parameter | conditions/description | min | typ | max | units |
|---|---|---|---|---|---|
| input power | max power: as per IEC-268-5, in 1 cc box | | 0.7 | 1.0 | W |
| impedance | at 2.0 kHz, 2.37 Vrms | 6.8 | 8 | 9.2 | Ω |
| coil resistance | | 6.48 | 7.2 | 7.92 | Ω |
| resonant frequency (Fo) | at 1.0 Vrms in free air, 10 cm<br>at 2.37 Vrms in 1 cc box, 10 cm | 440<br>680 | 550<br>850 | 660<br>1,020 | Hz<br>Hz |
| frequency response | | 100 | | 20,000 | Hz |
| sound pressure level | at 0.7 W, 10 cm, avg 0.8, 1.0, 1.5, 2.0 kHz, 1 cc box | 88 | 91 | 94 | dB |
| distortion | at 800~1,200 Hz, 2.37 Vrms, 10 cm<br>at 1,201~5,000 Hz, 2.37 Vrms, 10 cm | | | 15<br>10 | %<br>% |
| buzz, rattle, etc. | must be normal at sine wave, 0.2~2 kHz, 1 cc box | | | 2.37 | Vrms |
| polarity | cone moves forward w/ positive dc current to "+" terminal | | | | |
| dimensions | 15 x 11 x 3.5 | | | | mm |
| magnet | Nd-Fe-B | | | | |
| cone material | PEEK | | | | |
| weight | | | 1.5 | | g |
| operating temperature | | -20 | | 70 | °C |
| storage temperature | | -40 | | 85 | °C |
| hand soldering | for maximum 3 seconds (N/A for spring contacts) | | | 380 | °C |
| RoHS | yes | | | | |

Notes: 1. All specifications measured at 15~35°C, humidity at 25~75%, under 86~106 kPa pressure, unless otherwise noted.

## PART NUMBER KEY

**CMS-151135-078 XX**

Base Number

Termination Options:
S = spring contacts
SP = solder pads
L100 = wire leads, no connector
L100A = wire leads with Molex housing 51021-0200
L100B = wire leads with JST housing SHR-02V-S-B

## MECHANICAL DRAWINGS

units: mm
tolerance: ±0.2 mm

### SPRING CONTACTS

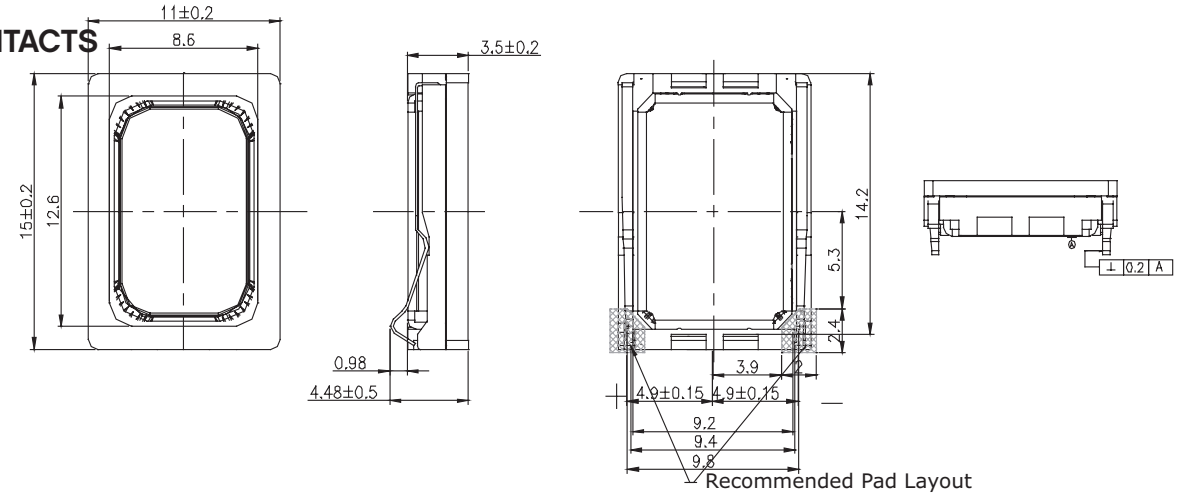


### SOLDER PADS

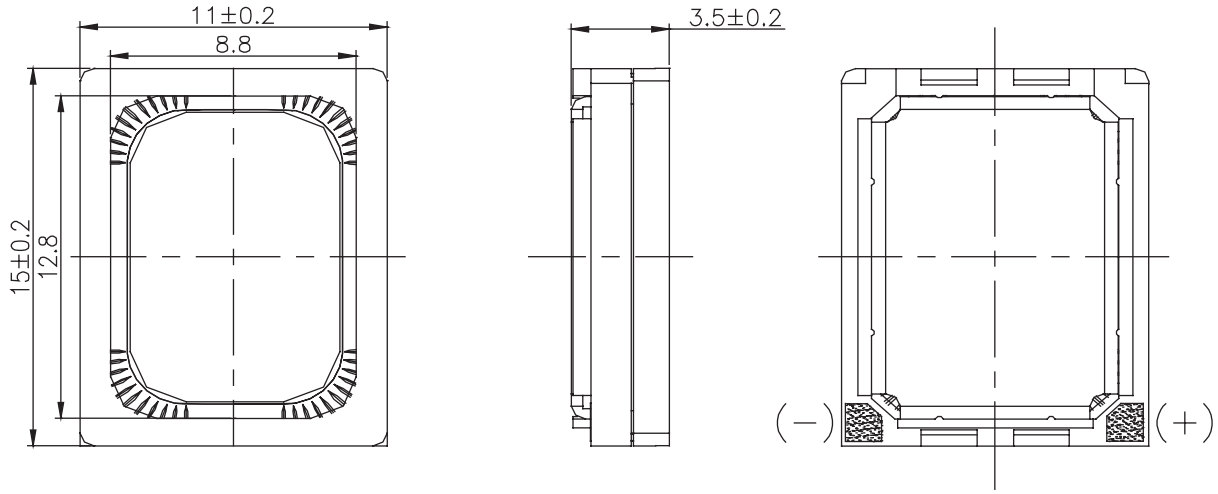

## MECHANICAL DRAWINGS (CONTINUED)

units: mm
tolerance: ±0.2 mm

### WIRE LEADS, NO CONNECTOR

wire: UL 1571 32 AWG

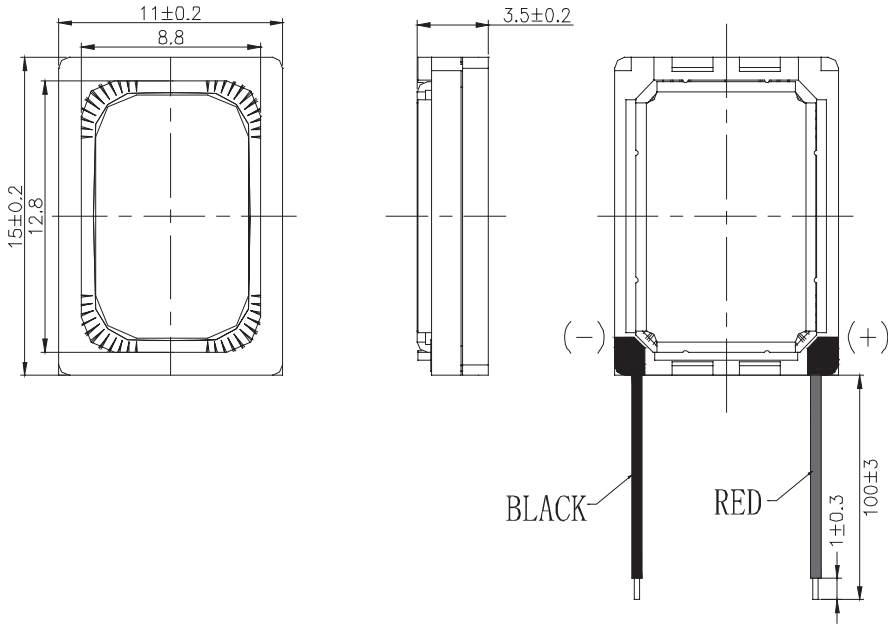


### WIRE LEADS WITH MOLEX CONNECTOR

wire: UL 1571 30 AWG
connector: Molex 51021-0200
mating connector: Molex 53261-0271

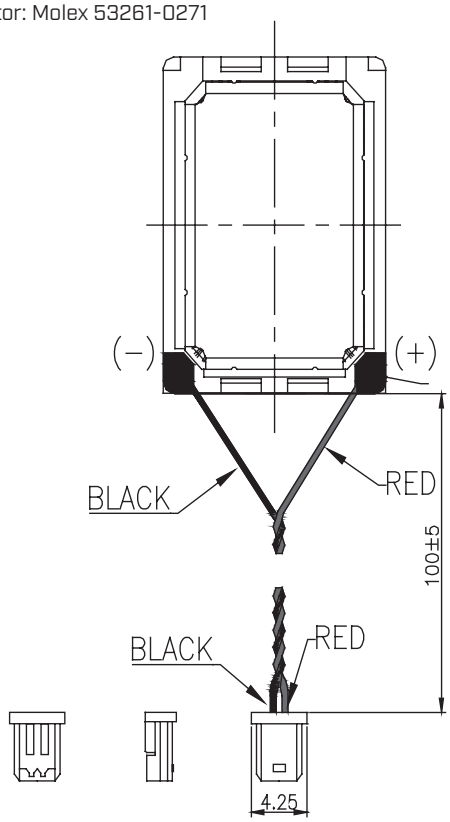


### WIRE LEADS WITH JST CONNECTOR

wire: UL 1571 30 AWG
connector: JST SHR-02V-S-B
mating connector: JST BM02B-SRSS-TB

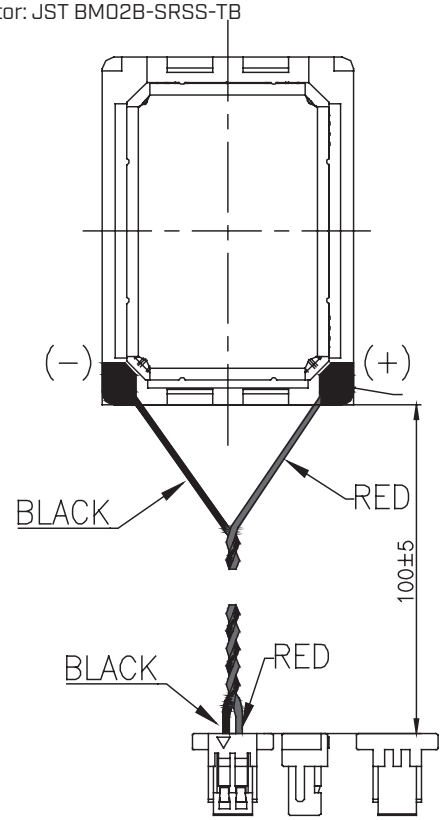

## RESPONSE CURVES

### Frequency Response Curve

Test Conditions: 2.37 Vrms / 10 cm in 1 cc box

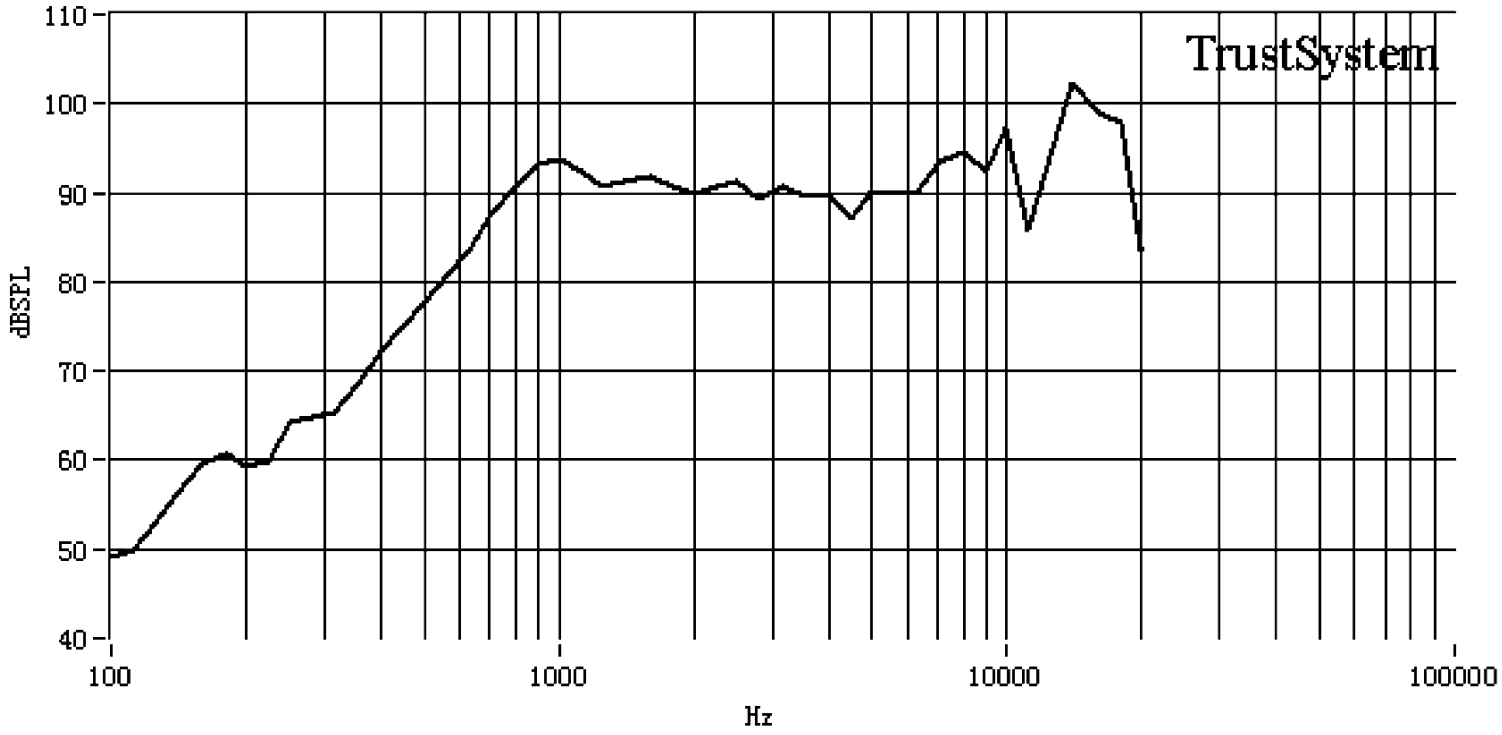


### Total Harmonic Distortion Curve

Test Conditions: 2.37 Vrms / 10 cm in 1 cc box

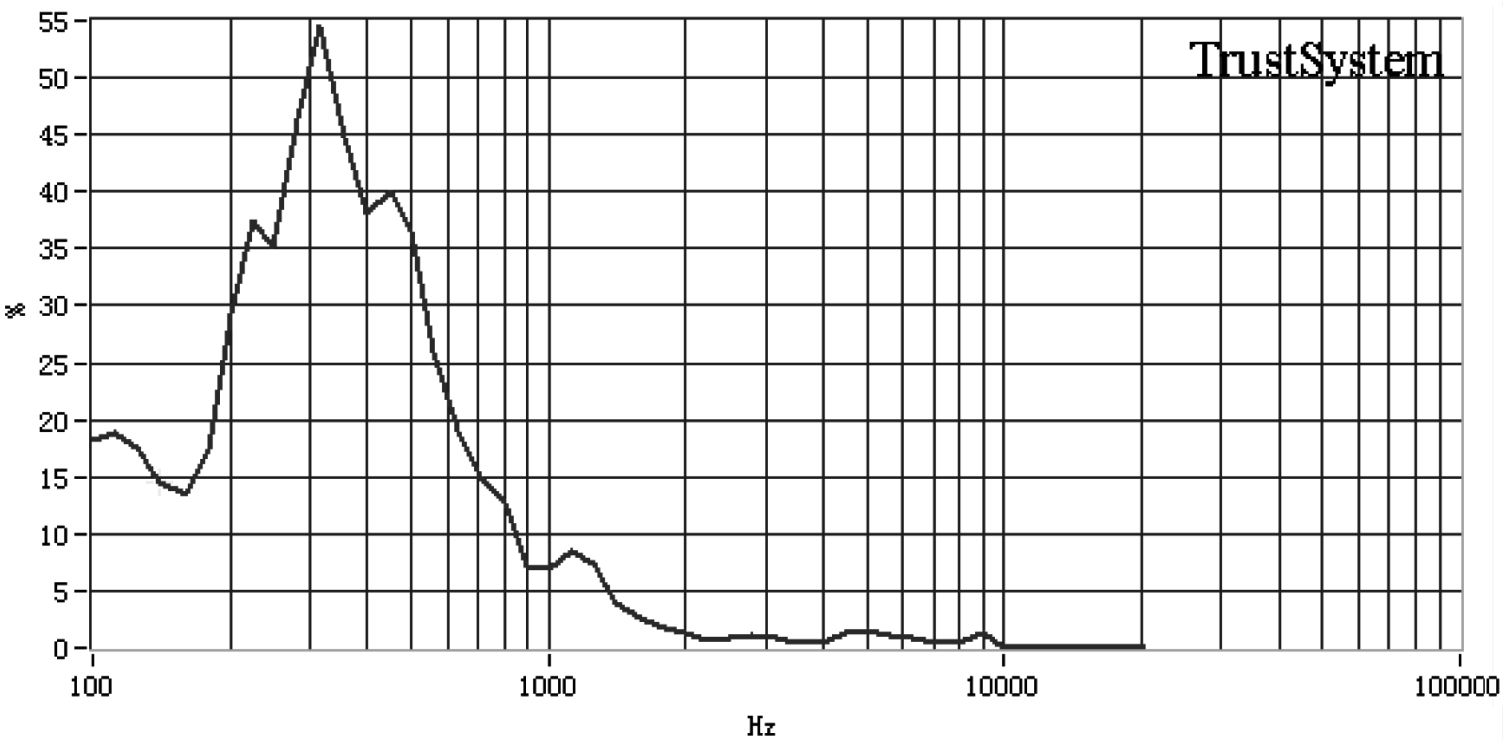

## PACKAGING

units: mm

Tray Size: 290 x 215 mm
Tray QTY: 100 pcs per tray
Carton Size: 470 x 300 x 310 mm
Carton QTY: 5,000 pcs per carton

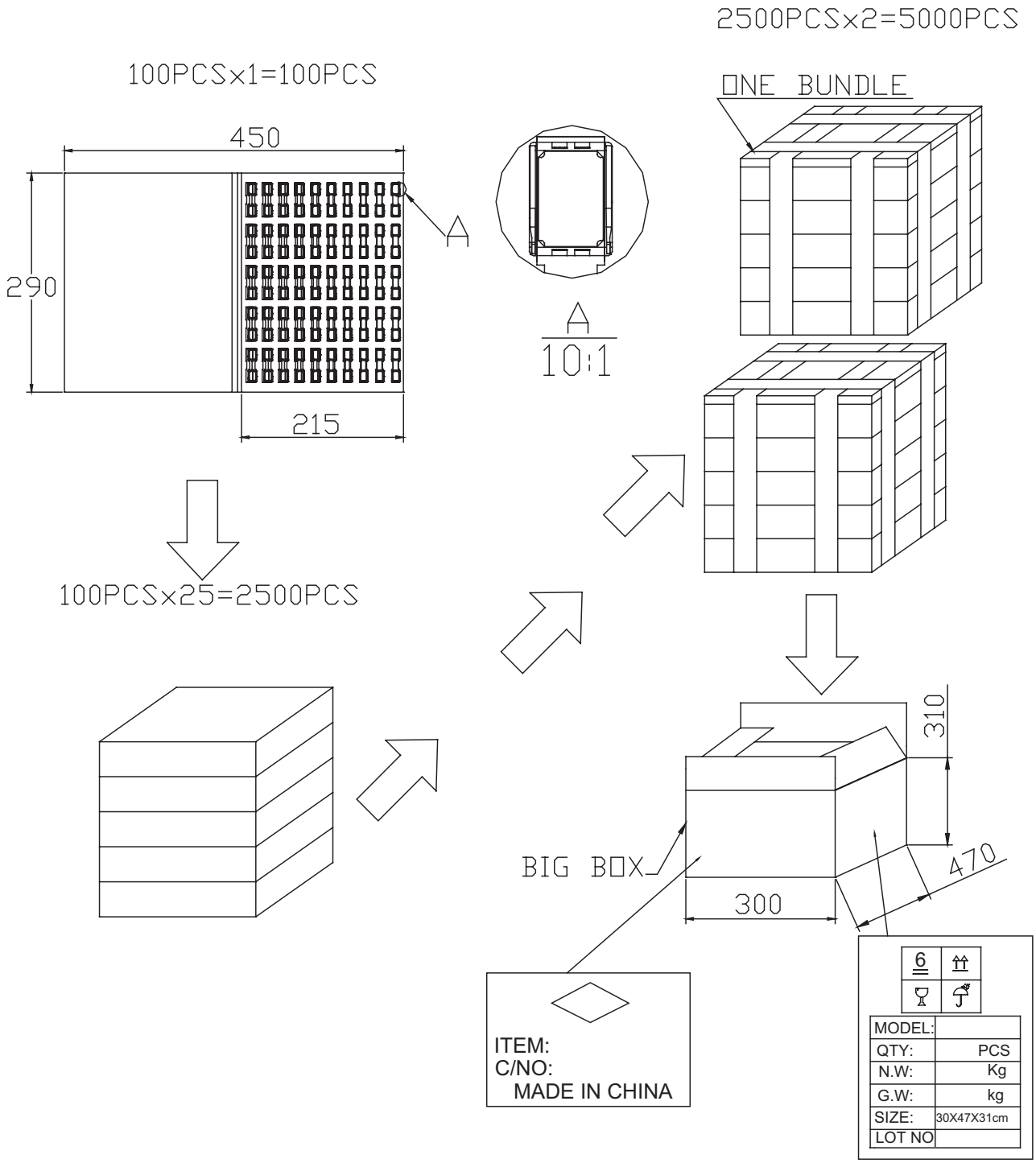

## REVISION HISTORY

| rev. | description | date |
|---|---|---|
| 1.0 | initial release | 03/22/2018 |
| 1.01 | brand update | 01/30/2020 |
| 1.02 | added Molex and JST connector options, updated packaging | 10/23/2020 |
| 1.03 | logo, datasheet style update | 08/05/2022 |

The revision history provided is for informational purposes only and is believed to be accurate.

CUI Devices offers a one (1) year limited warranty. Complete warranty information is listed on our website.

CUI Devices reserves the right to make changes to the product at any time without notice. Information provided by CUI Devices is believed to be accurate and reliable. However, no responsibility is assumed by CUI Devices for its use, nor for any infringements of patents or other rights of third parties which may result from its use.

CUI Devices products are not authorized or warranted for use as critical components in equipment that requires an extremely high level of reliability. A critical component is any component of a life support device or system whose failure to perform can be reasonably expected to cause the failure of the life support device or system, or to affect its safety or effectiveness.

**cuidevices.com**