CUDEVICES

SERIES: CMS-151135-078X-67 | **DESCRIPTION:** SPEAKER

FEATURES

- IP67 rated face
- protection against dust and water ingression
- micro-speaker
- 3.5 mm height
- 5 available termination options



RoHS IP67

SPECIFICATIONS

parameter	conditions/description	min	typ	max	units
input power	max power: as per IEC-268-5, in 1 cc box		0.7	1.0	W
impedance	at 2.0 kHz, 2.37 Vrms	6.8	8	9.2	Ω
coil resistance		6.48	7.2	7.92	Ω
resonant frequency (Fo)	at 1.0 Vrms in free air, 10 cm at 2.37 Vrms in 1 cc box, 10 cm	440 680	550 850	660 1,020	Hz Hz
frequency response		100		20,000	Hz
sound pressure level	at 0.7 W, 10 cm, avg 0.8, 1.0, 1.5, 2.0 kHz, 1 cc box	88	91	94	dB
distortion	at 800~1,200 Hz, 2.37 Vrms, 10 cm at 1,201~5,000 Hz, 2.37 Vrms, 10 cm			15 10	% %
buzz, rattle, etc.	must be normal at sine wave, 0.2~2 kHz, 1 cc box			2.37	Vrms
polarity	cone moves forward w/ positive dc current to "+" terminal				
dimensions	15 x 11 x 3.5				mm
magnet	Nd-Fe-B				
cone material	PEEK				
weight			1.5		g
operating temperature		-20		70	°C
storage temperature		-40		85	°C
hand soldering	for maximum 3 seconds (N/A for spring contacts)			380	°C
RoHS	yes				
IP level	IP67 (front side)				

Notes: 1. All specifications measured at 15~35°C, humidity at 25~75%, under 86~106 kPa pressure, unless otherwise noted.

PART NUMBER KEY

CMS-151135-078 XX - 67

Base Number

Termination Options:
S = spring contacts
SP = solder pads
L100 = wire leads, no connector
L100A = wire leads with Molex housing 51021-0200
L100B = wire leads with JST housing SHR-02V-S-B

MECHANICAL DRAWINGS

units: mm
tolerance: ±0.2 mm

SPRING CONTACTS

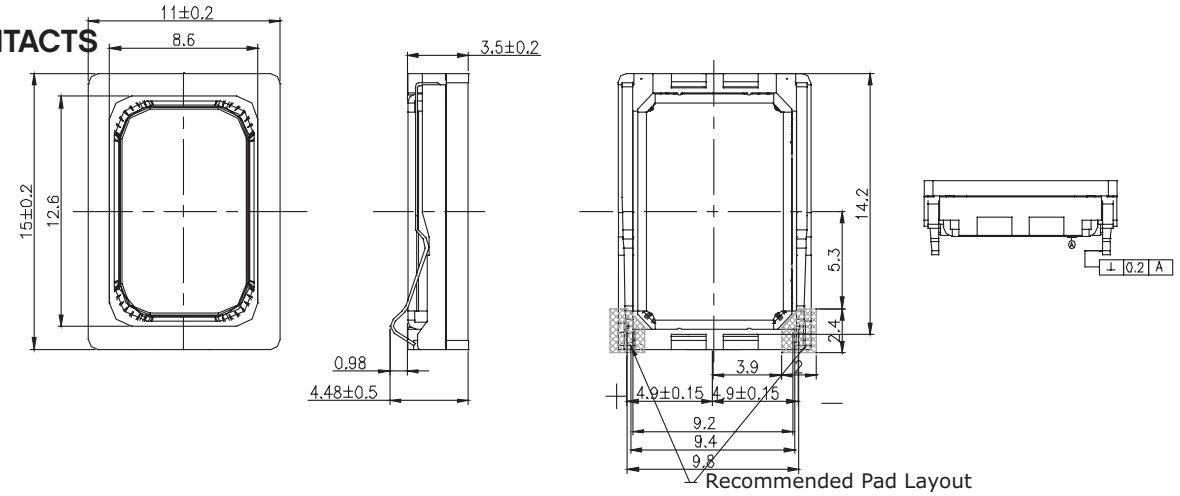

SOLDER PADS

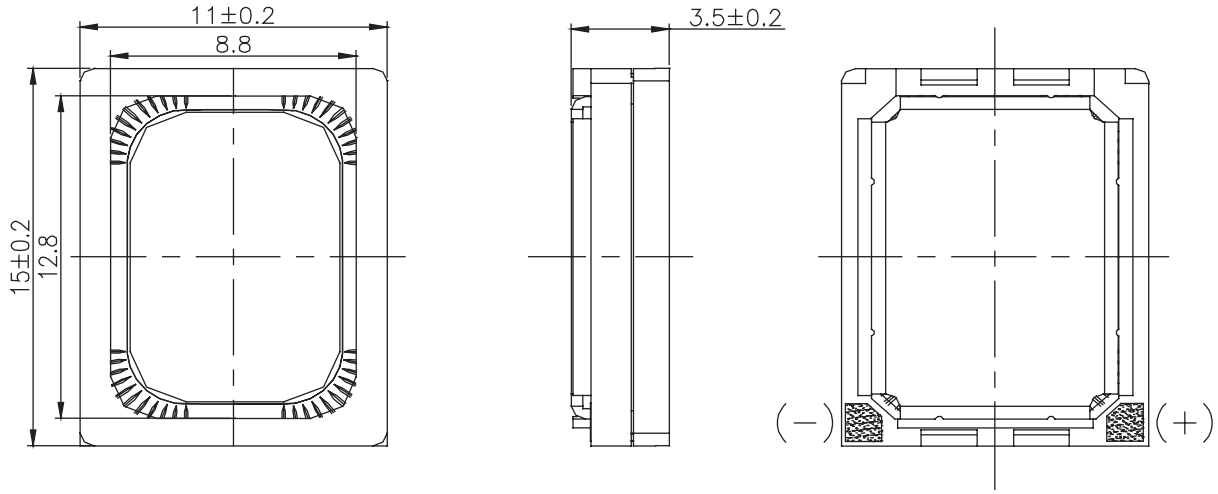

MECHANICAL DRAWINGS (CONTINUED)

units: mm
tolerance: ±0.2 mm

WIRE LEADS, NO CONNECTOR

wire: UL 1571 32 AWG

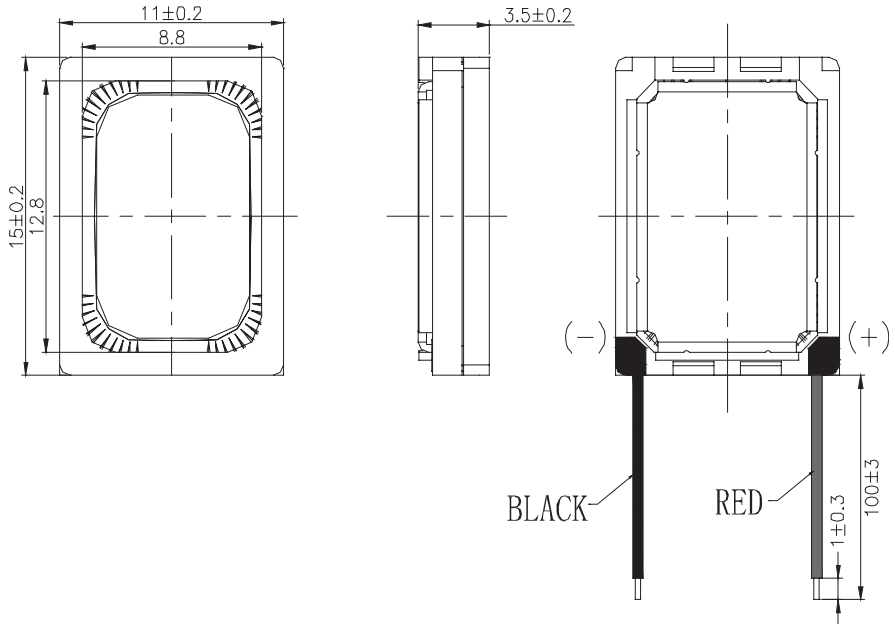

WIRE LEADS WITH MOLEX CONNECTOR

wire: UL 1571 30 AWG
connector: Molex 51021-0200
mating connector: Molex 53261-0271

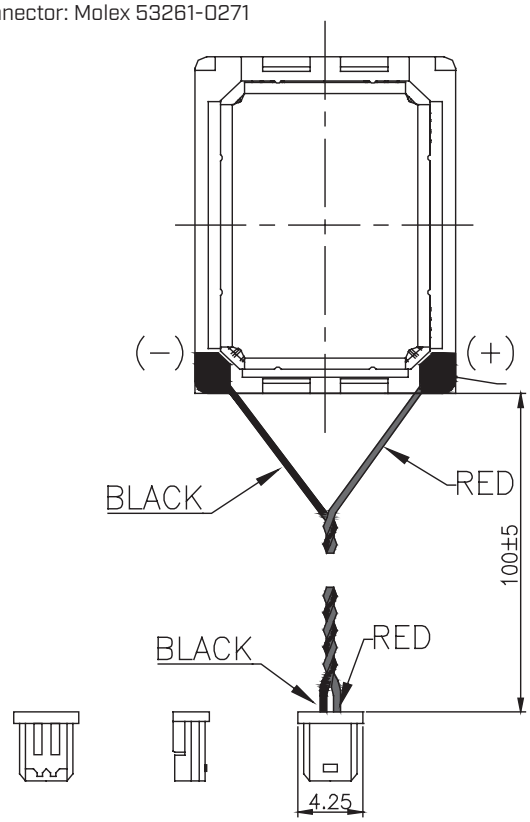

WIRE LEADS WITH JST CONNECTOR

wire: UL 1571 30 AWG
connector: JST SHR-02V-S-B
mating connector: JST BM02B-SRSS-TB

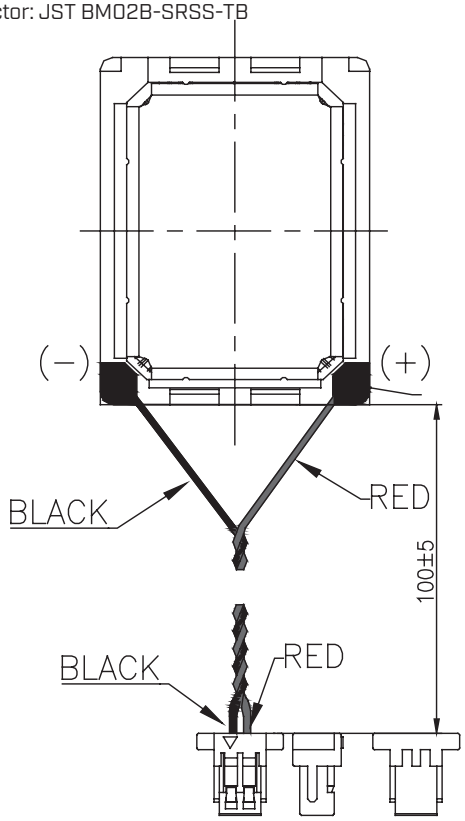

RESPONSE CURVES

Frequency Response Curve

Test Conditions: 2.37 Vrms / 10 cm in 1 cc box

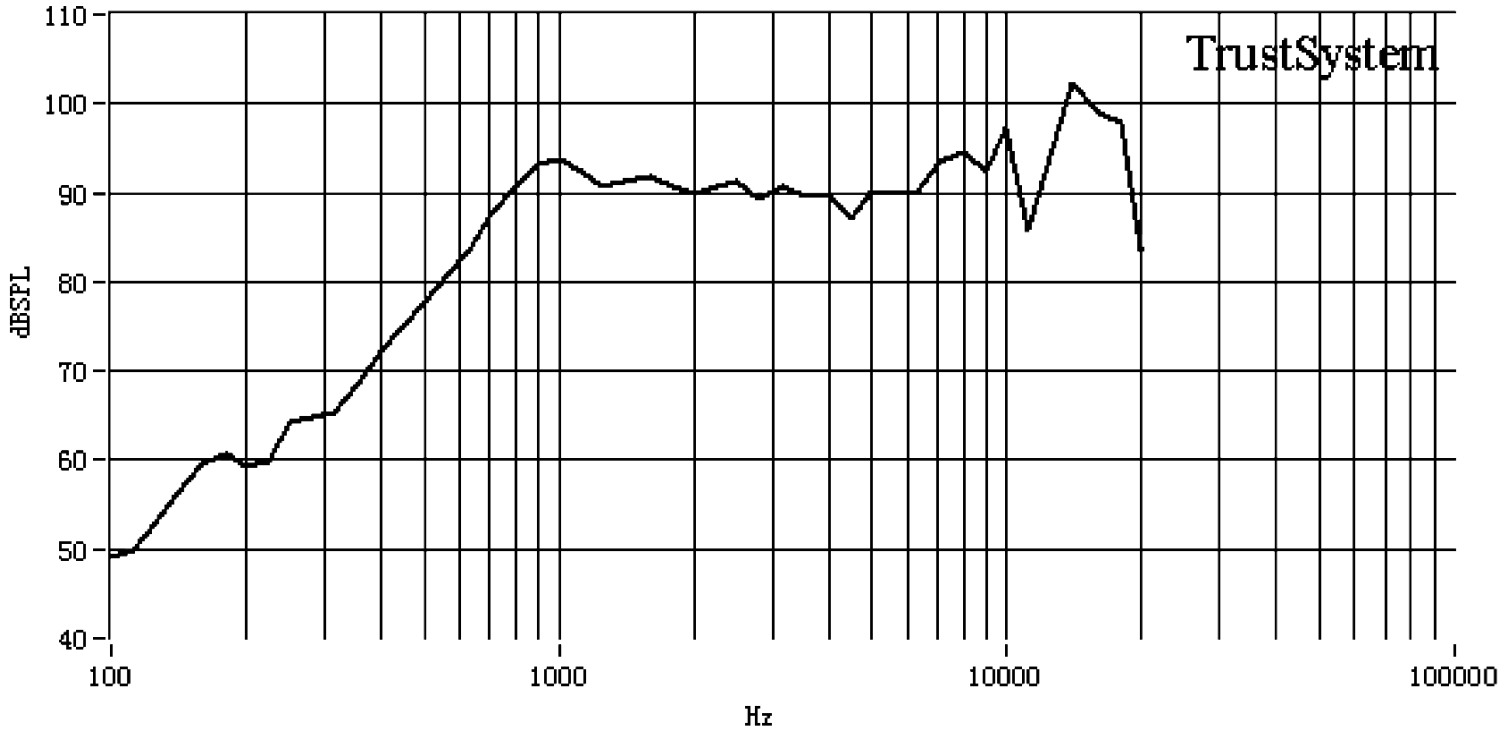

Total Harmonic Distortion Curve

Test Conditions: 2.37 Vrms / 10 cm in 1 cc box

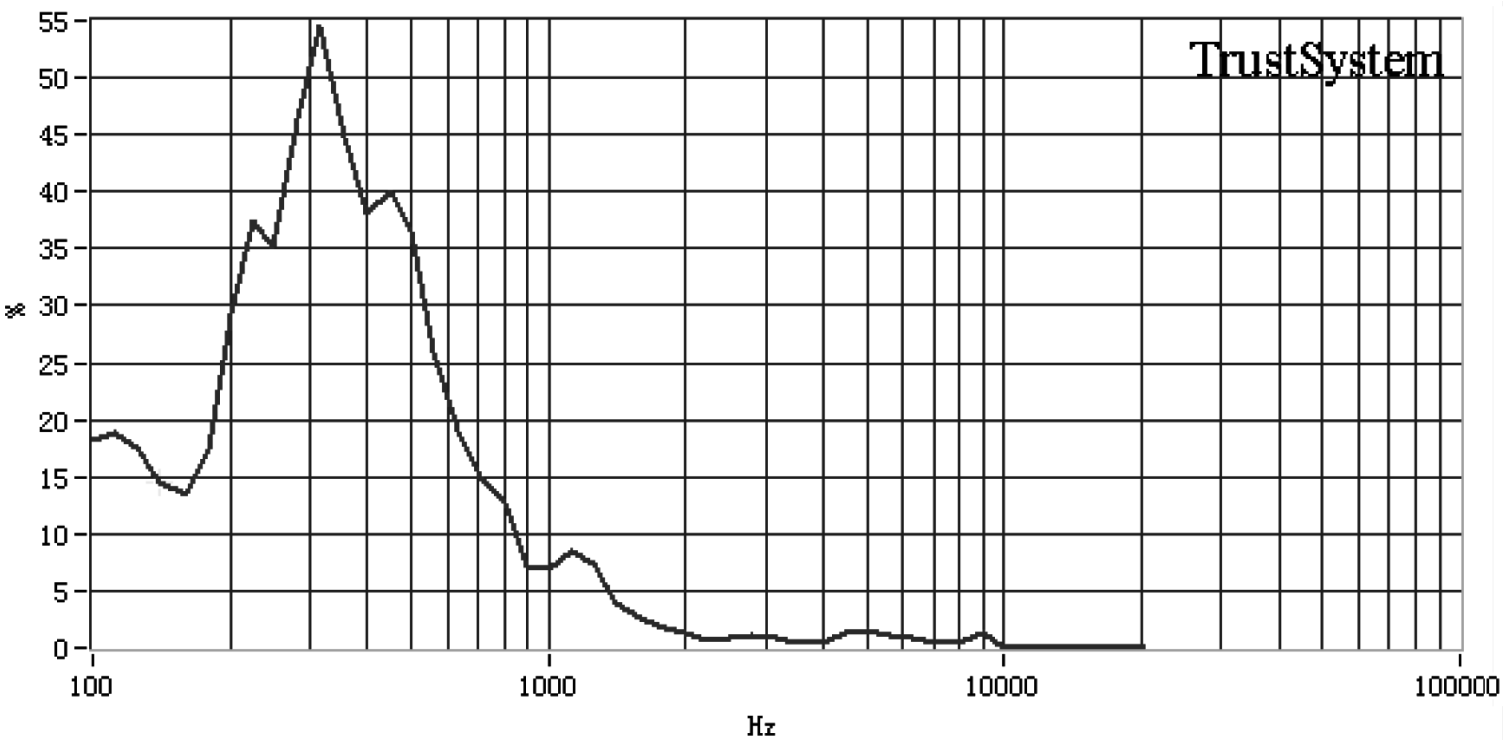

PACKAGING

units: mm

Tray Size: 290 x 215 mm
Tray QTY: 100 pcs per tray
Carton Size: 470 x 300 x 310 mm
Carton QTY: 5,000 pcs per carton

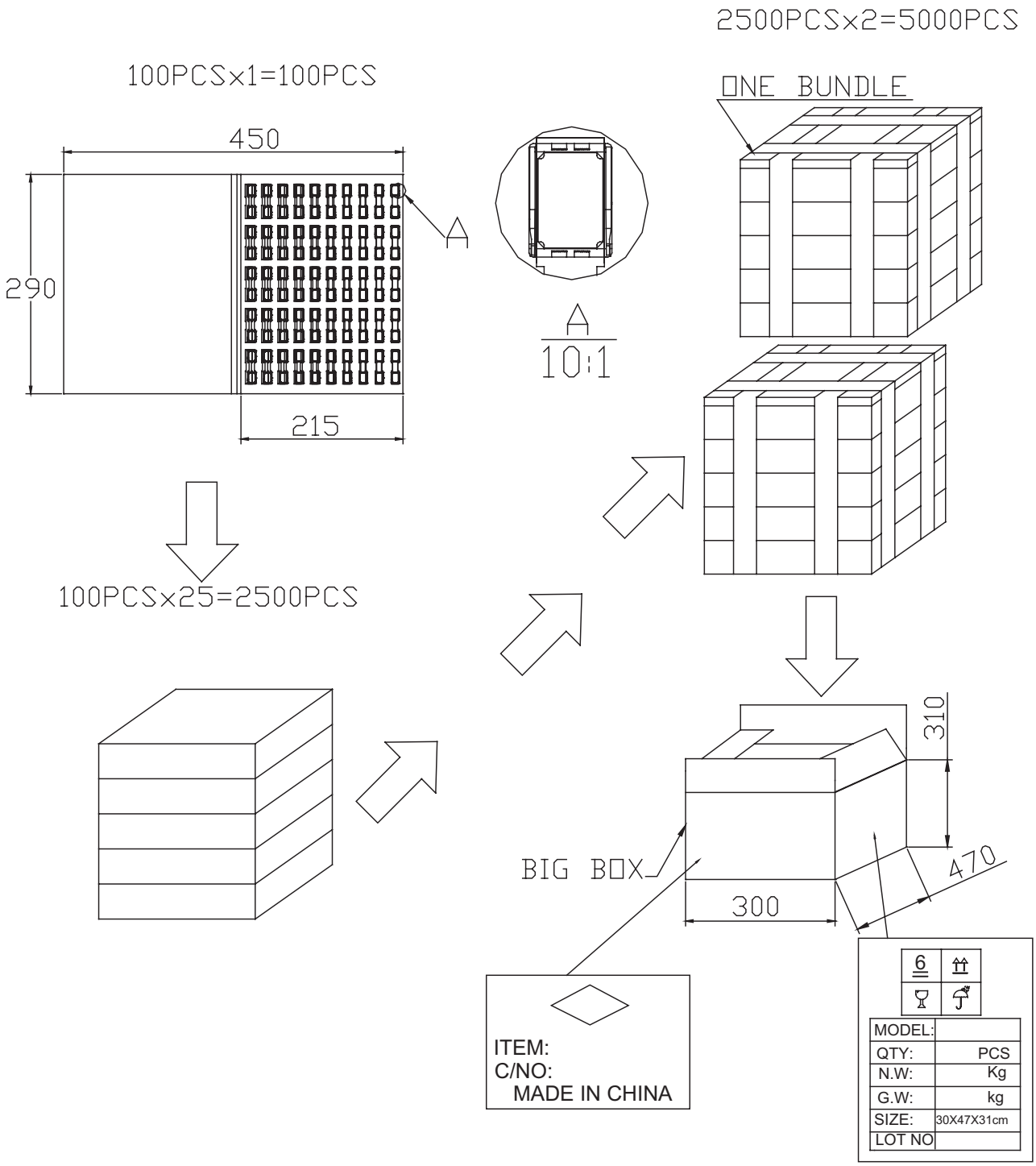

REVISION HISTORY

rev.	description	date
1.0	initial release	07/23/2018
1.01	brand update	01/24/2020
1.02	added Molex and JST connector options, updated packaging	10/23/2020
1.03	logo, datasheet style update	08/05/2022

The revision history provided is for informational purposes only and is believed to be accurate.

CUI Devices offers a one (1) year limited warranty. Complete warranty information is listed on our website.

CUI Devices reserves the right to make changes to the product at any time without notice. Information provided by CUI Devices is believed to be accurate and reliable. However, no responsibility is assumed by CUI Devices for its use, nor for any infringements of patents or other rights of third parties which may result from its use.

CUI Devices products are not authorized or warranted for use as critical components in equipment that requires an extremely high level of reliability. A critical component is any component of a life support device or system whose failure to perform can be reasonably expected to cause the failure of the life support device or system, or to affect its safety or effectiveness.

cuidevices.com