MODEL: CMS-18132-18SP | DESCRIPTION: SPEAKER

FEATURES

- 8 ohm rated impedance
- 1 W rated power
- 500 Hz resonance frequency

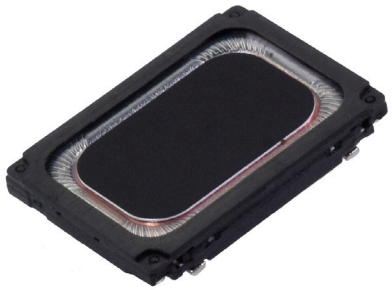

RoHS

SPECIFICATIONS

parameter	conditions/description	min	typ	max	units
input power	max power: IEC-60268-5, filter 60 seconds on, 120 seconds off, 10 cycles (room temp), in 1 cc box		1.0	1.2	W
impedance		6.8	8	9.2	Ω
resonant frequency (Fo)	at 1.0 V at 1.0 V in 1 cc closed box	400 720	500 900	600 1,080	Hz Hz
frequency response		Fo		10,000	Hz
sound pressure level	at 1.0 W, 10 cm, avg at 2.0 kHz in 1 cc closed box	92	95	98	dB
distortion	at 1.0 kHz, rated power			10	%
buzz, rattle, etc.	must be normal at sine wave, frequency range			2.83	V
polarity	cone moves forward w/ positive dc current to “+” terminal				
dimensions	18.0 x 13.0 x 2.5				mm
magnet	Nd-Fe-B				
frame material	PPA				
cone material	PEEK				
terminal	solder pads				
weight			1.9		g
operating temperature		-20		60	°C
storage temperature		-30		75	°C
hand soldering	for maximum 3 seconds	370	380	390	°C
RoHS	yes				

Notes: 1. All specifications measured at 5~35°C, humidity at 45~85%, under 86~106 kPa pressure, unless otherwise noted.

MECHANICAL DRAWING

units: mm
tolerance: ±0.2 mm

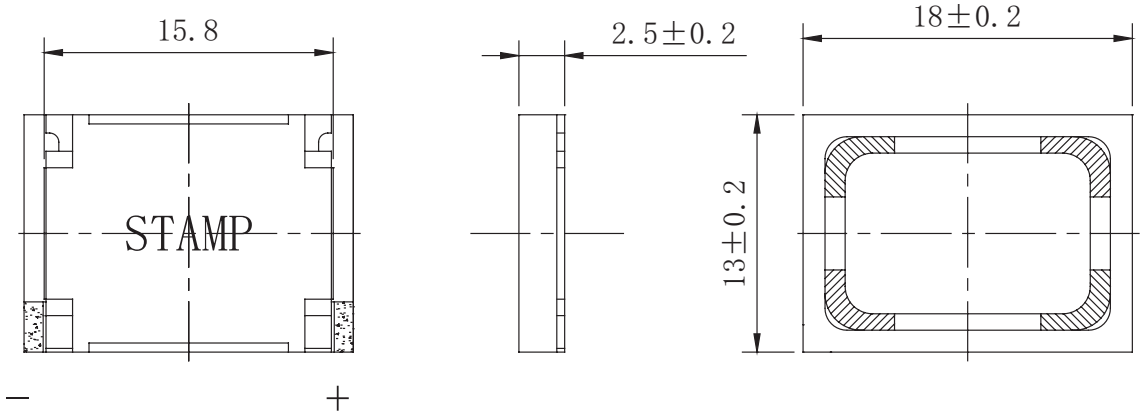

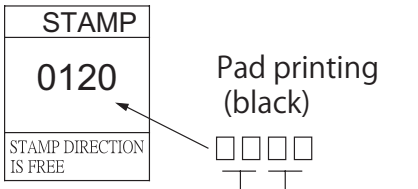

Pad printing
(black)

□□□□

WEEK — YEAR

01 — 20---2020

02 — 21---2021

RESPONSE CURVES

Frequency Response Curve

Test Conditions: 1.0 W / 10 cm in 1 cc closed box

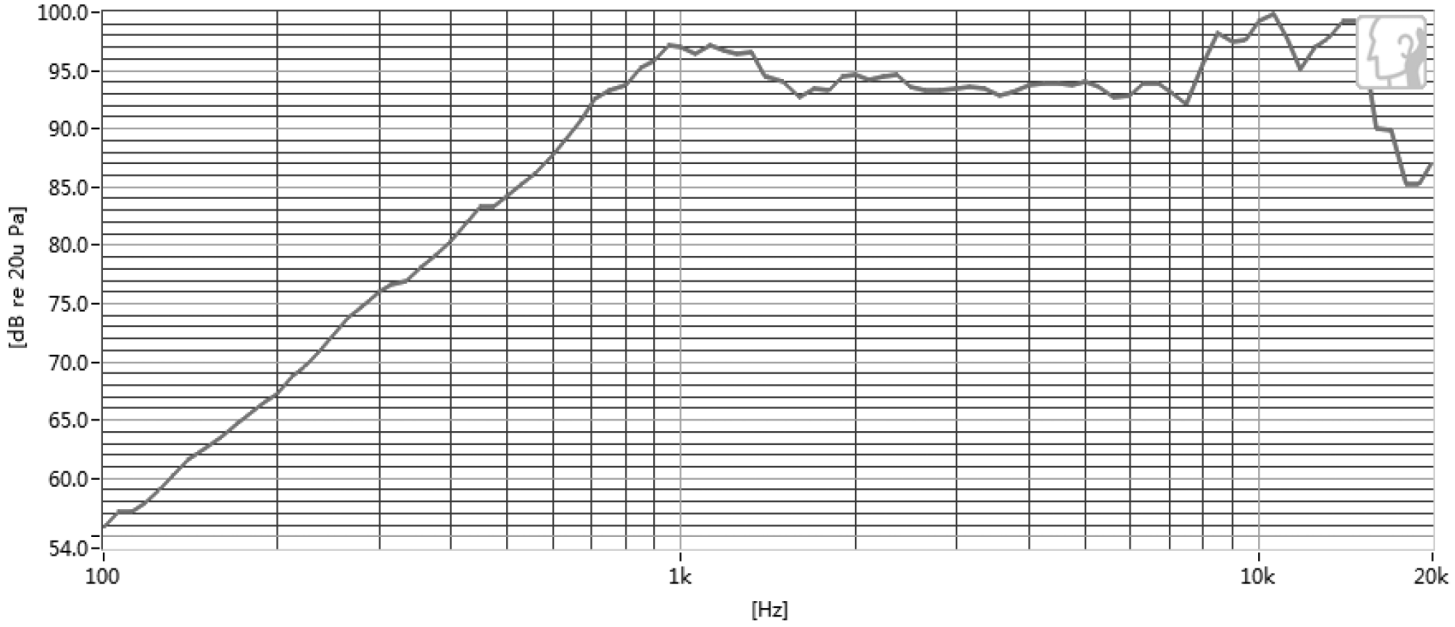

Total Harmonic Distortion Curve

Test Conditions: 1.0 W / 10 cm in 1 cc closed box

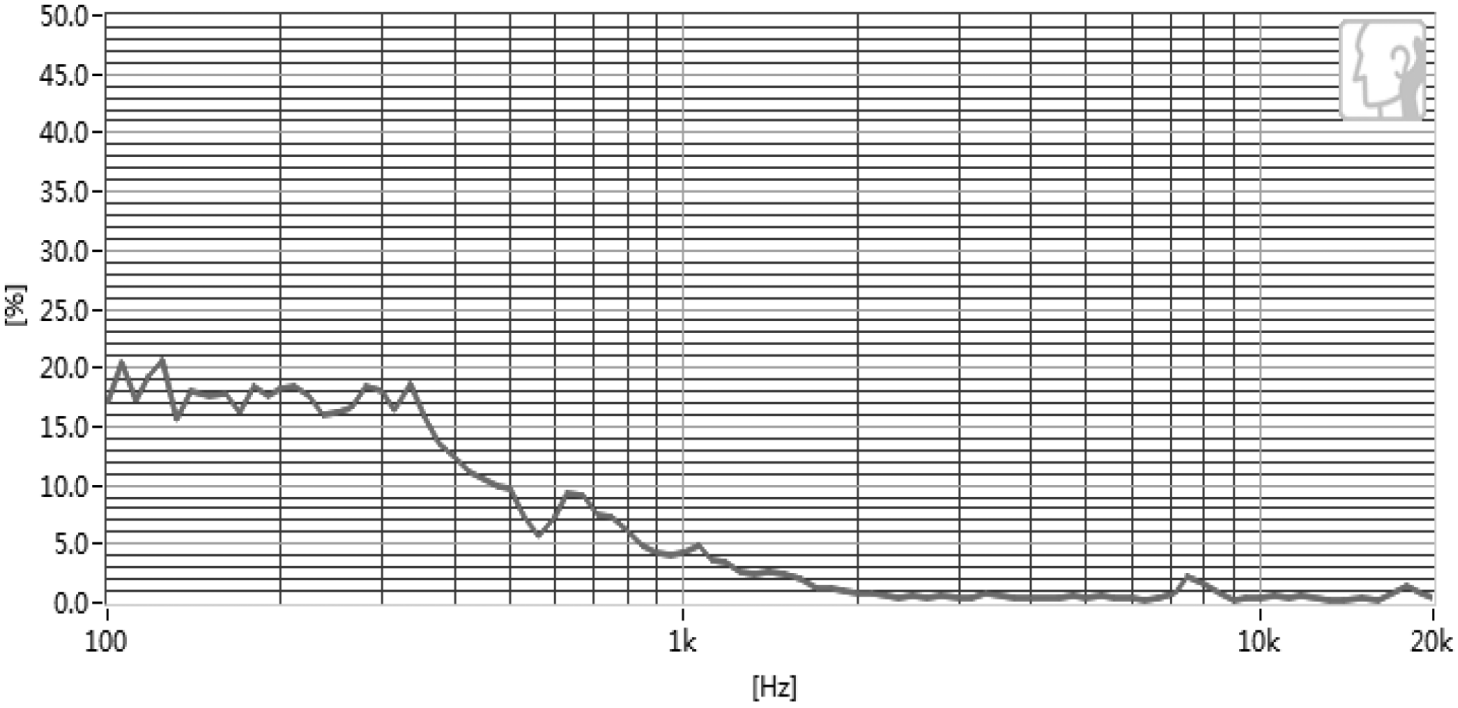

PACKAGING

units: mm

Tray Size: 350 x 240 x 16 mm
Tray QTY: 28 pcs per tray
Carton Size: 360 x 360 x 290 mm
Carton QTY: 504 pcs per carton

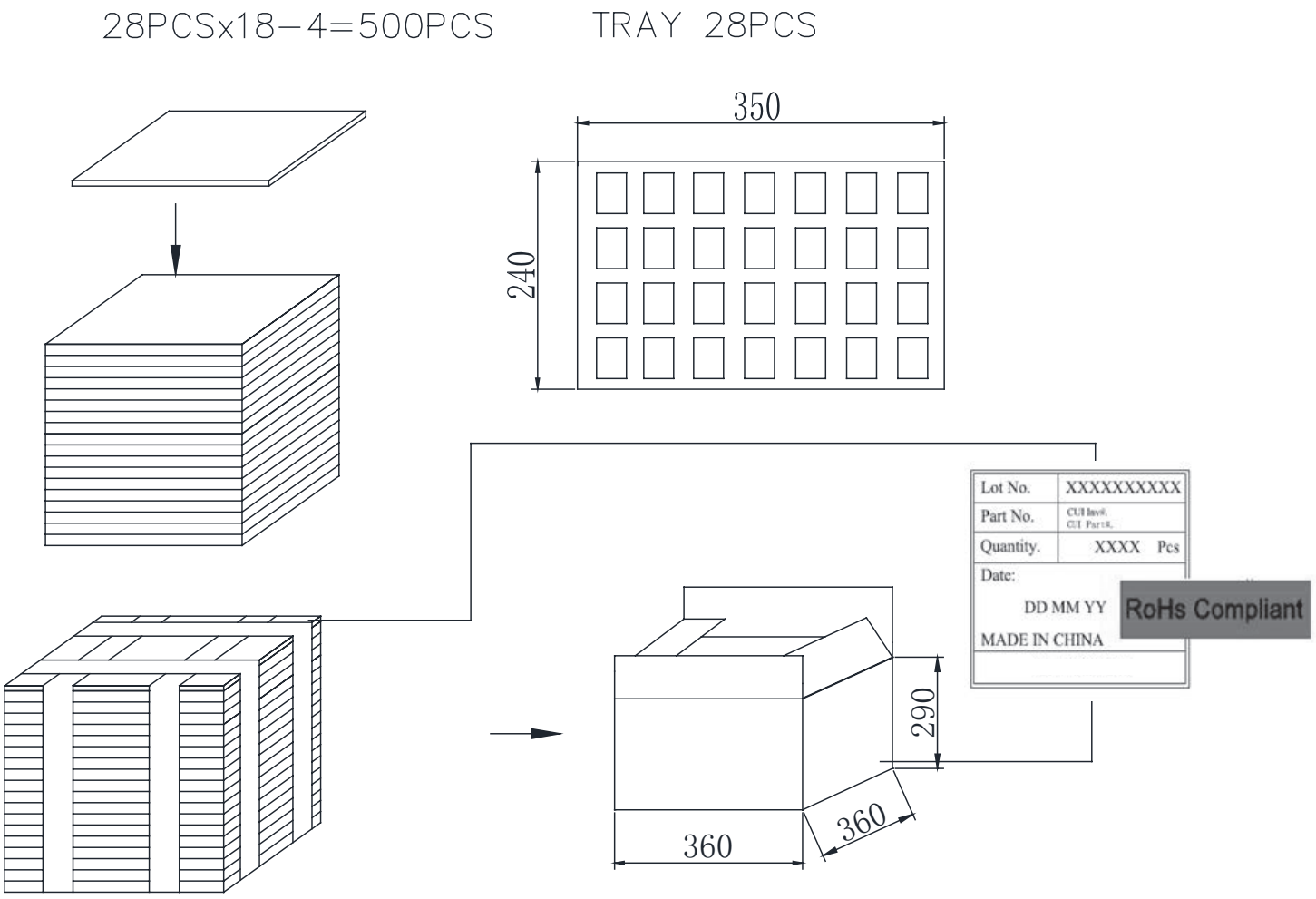

REVISION HISTORY

rev.	description	date
1.0	initial release	06/08/2020
1.01	logo, datasheet style update	08/05/2022

The revision history provided is for informational purposes only and is believed to be accurate.

CUI Devices offers a one (1) year limited warranty. Complete warranty information is listed on our website.

CUI Devices reserves the right to make changes to the product at any time without notice. Information provided by CUI Devices is believed to be accurate and reliable. However, no responsibility is assumed by CUI Devices for its use, nor for any infringements of patents or other rights of third parties which may result from its use.

CUI Devices products are not authorized or warranted for use as critical components in equipment that requires an extremely high level of reliability. A critical component is any component of a life support device or system whose failure to perform can be reasonably expected to cause the failure of the life support device or system, or to affect its safety or effectiveness.

cuidevices.com