CUDEVICES

MODEL: CMS-25145-28SP-67 | **DESCRIPTION:** SPEAKER

FEATURES

- 1.0 W rated power
- 8 ohm rated impedance
- IP67 rated



RoHS IP67

SPECIFICATIONS

parameter	conditions/description	min	typ	max	units
input power	max power: IEC-60268-5, filter 60 seconds on, 120 seconds off, 10 cycles (room temp)		1.0	1.5	W
impedance	at 1.0 kHz	6.8	8	9.2	Ω
resonant frequency (Fo)	at 1.0 V	520	650	780	Hz
frequency response		Fo		20,000	Hz
sound pressure level	at 1.0 W, 10 cm, avg at 0.8, 1.0, 1.2, 1.5 kHz	90	93	96	dB
distortion	at 1.0 kHz, 1.0 W			10	%
buzz, rattle, etc.	must be normal at sine wave, Fo~20 kHz			2.83	V
polarity	cone moves forward w/ positive dc current to “+” terminal				
dimensions	25.0 x 14.0 x 5.0				mm
magnet	Nd-Fe-B				
frame material	PBT				
cone material	PU-PEI				
terminal	solder pads				
weight			1.8		g
operating temperature		-25		70	°C
storage temperature		-25		70	°C
hand soldering	for maximum 3 seconds	370	380	390	°C
RoHS	yes				
IP level	IP67 (front side)				

Notes: 1. All specifications measured at 5~35°C, humidity at 45~85%, under 86~106 kPa pressure, unless otherwise noted.

MECHANICAL DRAWING

units: mm
tolerance: ±0.5 mm

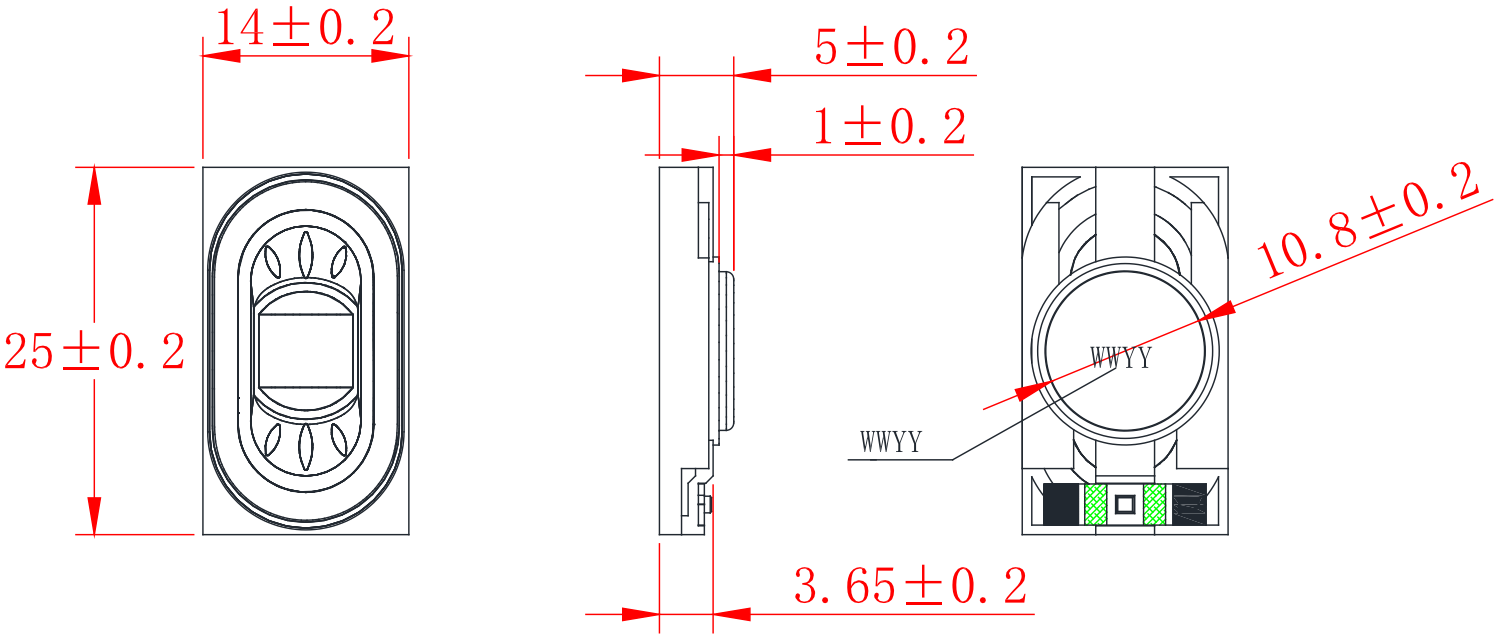

RESPONSE CURVES

Frequency Response Curve

Test Conditions: 1.0 W / 10 cm

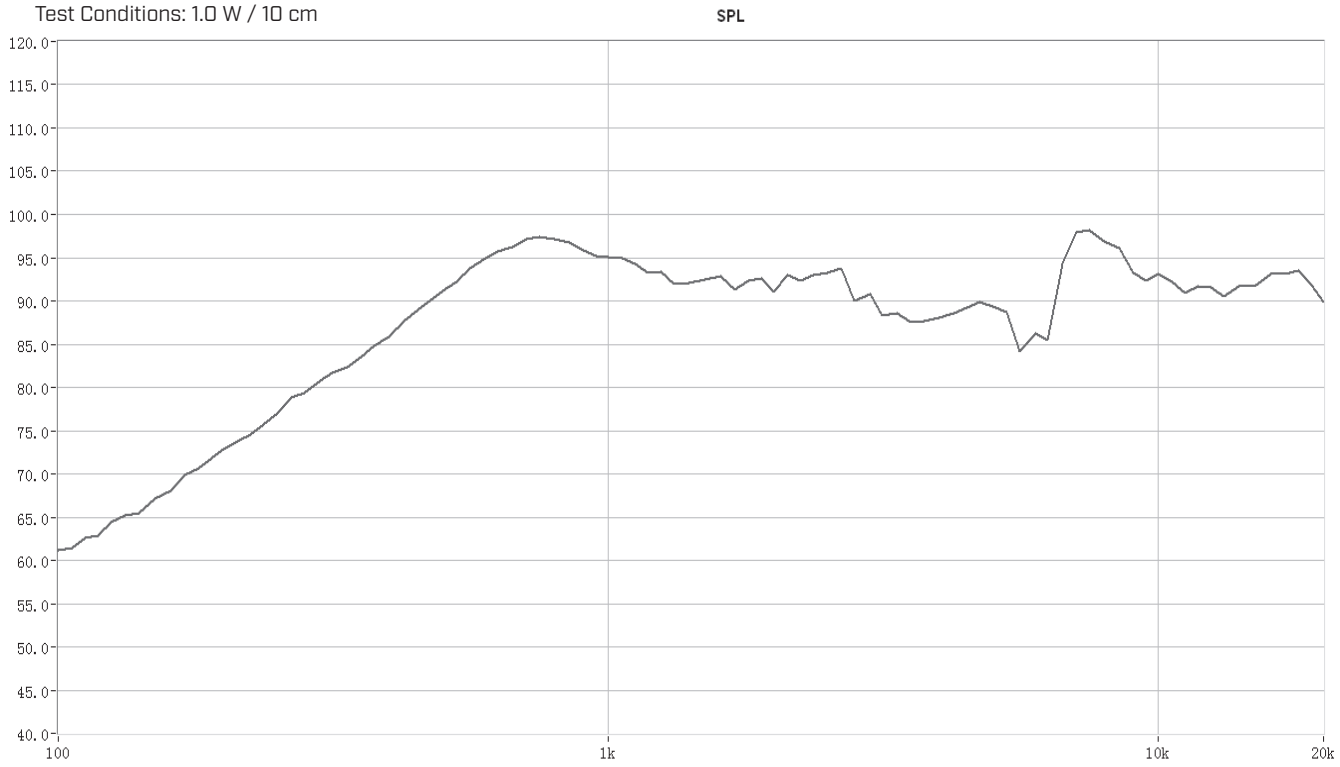

Total Harmonic Distortion Curve

Test Conditions: 1.0 W / 10 cm

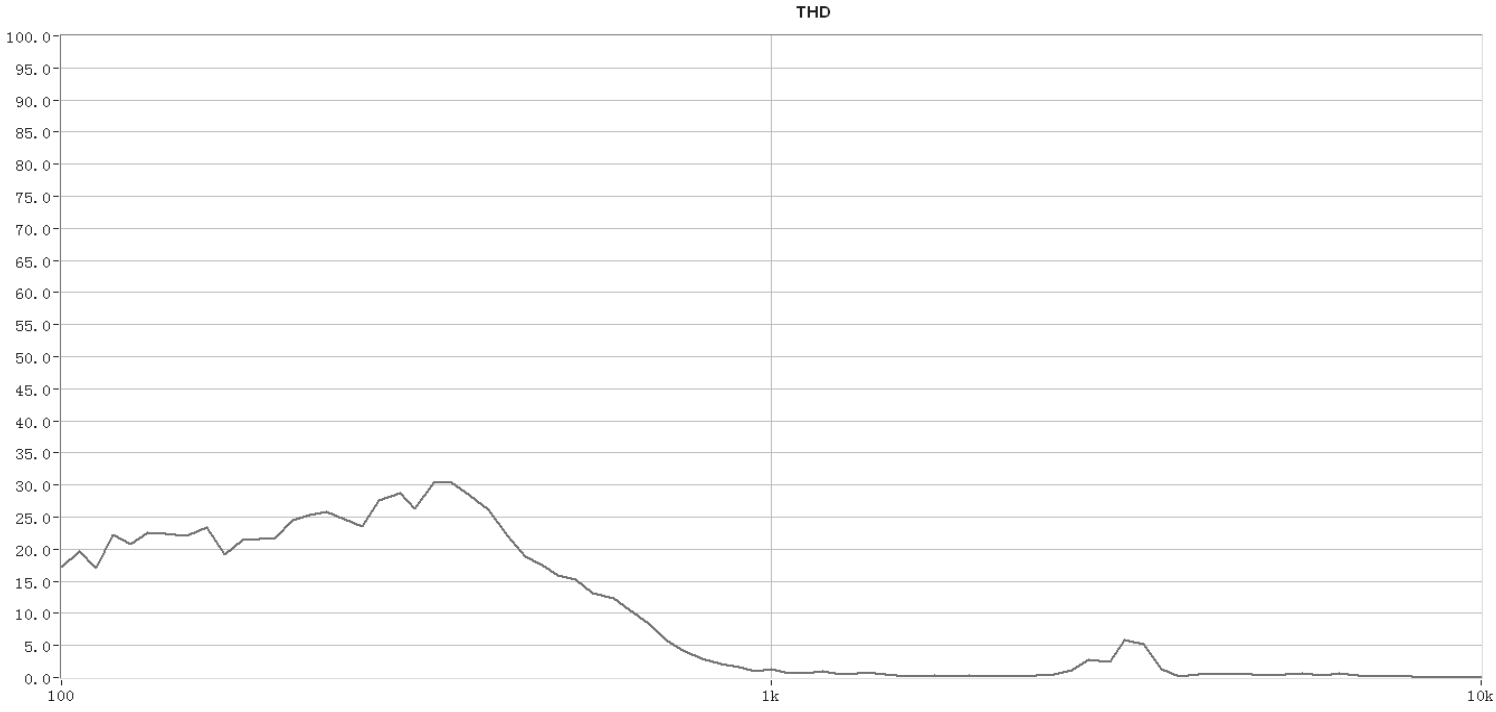

PACKAGING

units: mm

Tray Size: 425 x 275 x 18 mm
Tray QTY: 90 pcs per tray
Carton Size: 445 x 285 x 390 mm
Carton QTY: 1,800 pcs per carton

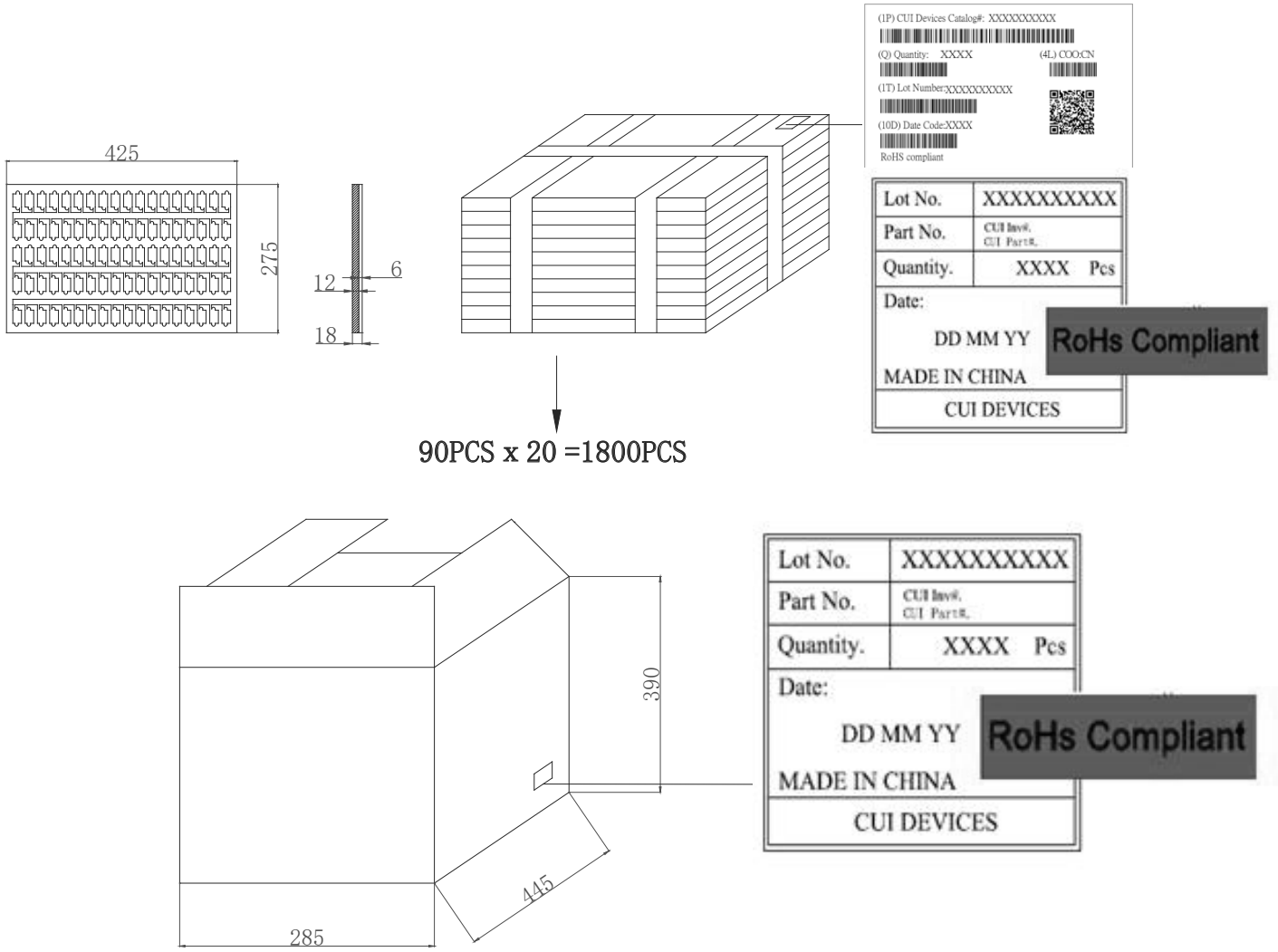

REVISION HISTORY

rev.	description	date
1.0	initial release	06/08/2020
1.01	added date code marking	01/05/2021
1.02	logo, datasheet style update	08/05/2022
1.03	modified design	11/01/2023

The revision history provided is for informational purposes only and is believed to be accurate.

CUI Devices offers a one (1) year limited warranty. Complete warranty information is listed on our website.

CUI Devices reserves the right to make changes to the product at any time without notice. Information provided by CUI Devices is believed to be accurate and reliable. However, no responsibility is assumed by CUI Devices for its use, nor for any infringements of patents or other rights of third parties which may result from its use.

CUI Devices products are not authorized or warranted for use as critical components in equipment that requires an extremely high level of reliability. A critical component is any component of a life support device or system whose failure to perform can be reasonably expected to cause the failure of the life support device or system, or to affect its safety or effectiveness.

cuidevices.com