CUDEVICES

MODEL: CMS-3648-0320SP | **DESCRIPTION:** SPEAKER

FEATURES

- 20 ohm
- rated 0.3 W
- solder pads



RoHS

SPECIFICATIONS

parameter	conditions/description	min	typ	max	units
input power			0.3	0.5	W
impedance		17	20	23	Ω
resonant frequency (Fo)		400	500	600	Hz
frequency response		Fo		20,000	Hz
sound pressure level	at 0.5 W, 50 cm, avg 1.0, 1.2, 1.5, 2.0 kHz	82	85	88	dB
distortion	at 1.0 kHz, 0.5 W, 50 cm			5	%
buzz, rattle, etc.	must be normal at sine wave			2.45	V
polarity	cone moves forward w/ positive dc current to “+” terminal				
dimensions	Ø36 x 4.8				mm
magnet	Nd-Fe-B				
frame material	iron				
cone material	PEI				
terminal	solder pads				
weight			8		g
operating temperature		-20		55	°C
storage temperature		-25		60	°C
hand soldering	for maximum 2 seconds	360		380	°C
RoHS	yes				

Notes: 1. All specifications measured at 15~35°C, humidity at 25~75%, unless otherwise noted.

MECHANICAL DRAWING

units: mm
tolerance:
X≤8: ±0.1 mm
8<X≤16: ±0.15 mm
16<X≤24: ±0.20 mm
24<X≤50: ±0.25 mm
unless otherwise specified

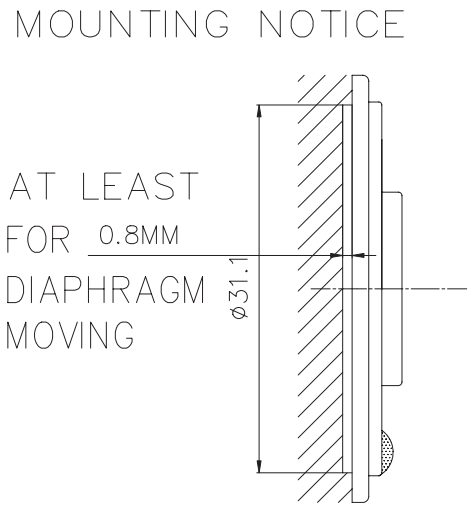

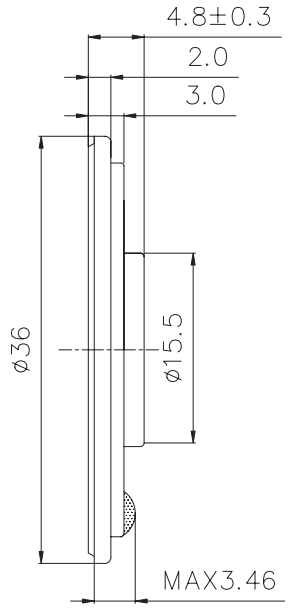

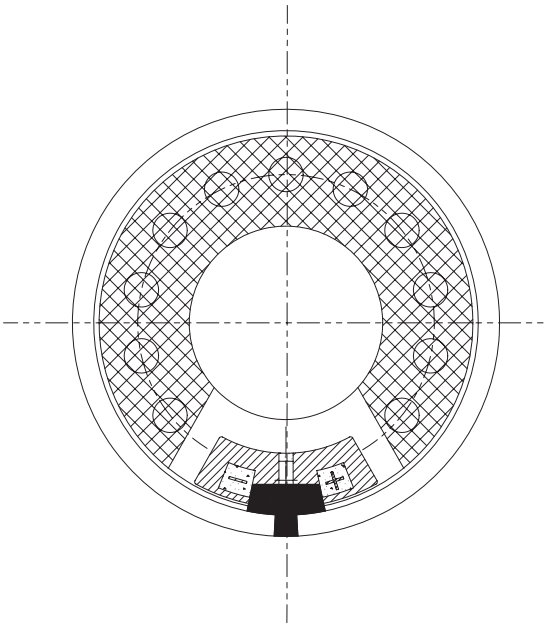

RESPONSE CURVES

Frequency Response Curve

Test Conditions: 3.16 V / 50 cm

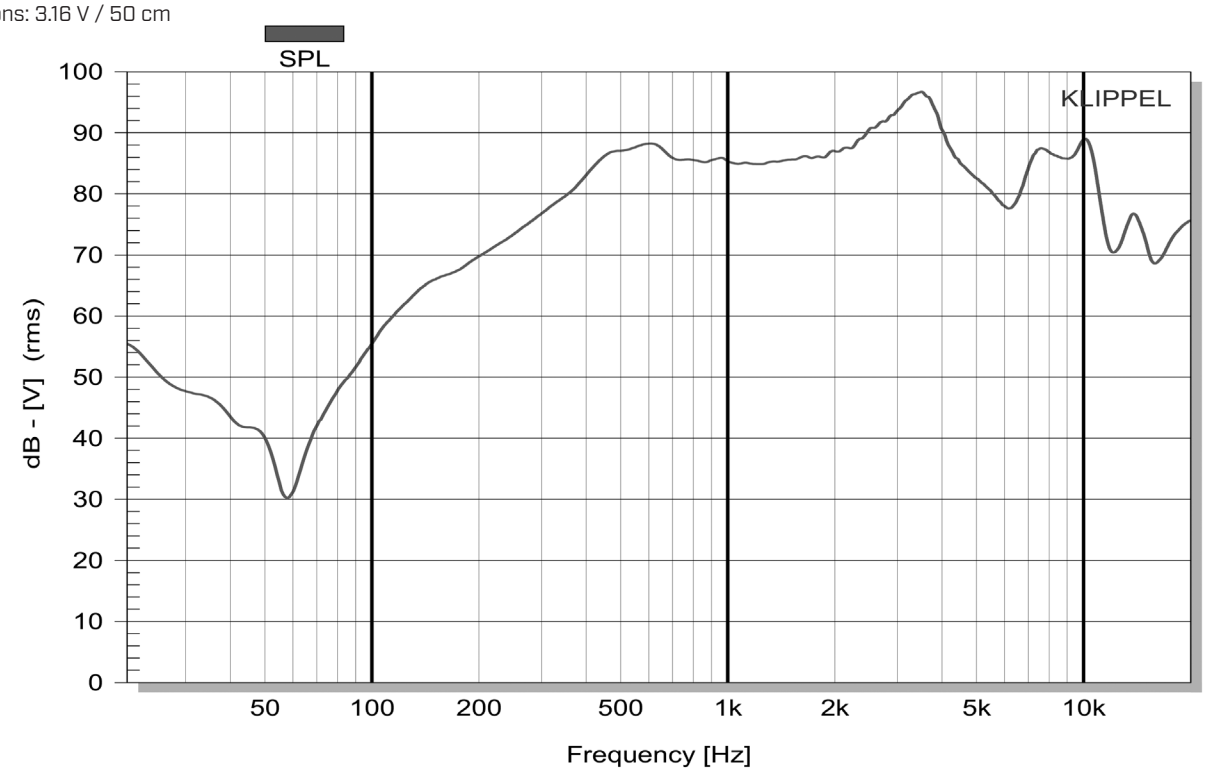

Total Harmonic Distortion Curve

Test Conditions: 3.16 V / 50 cm

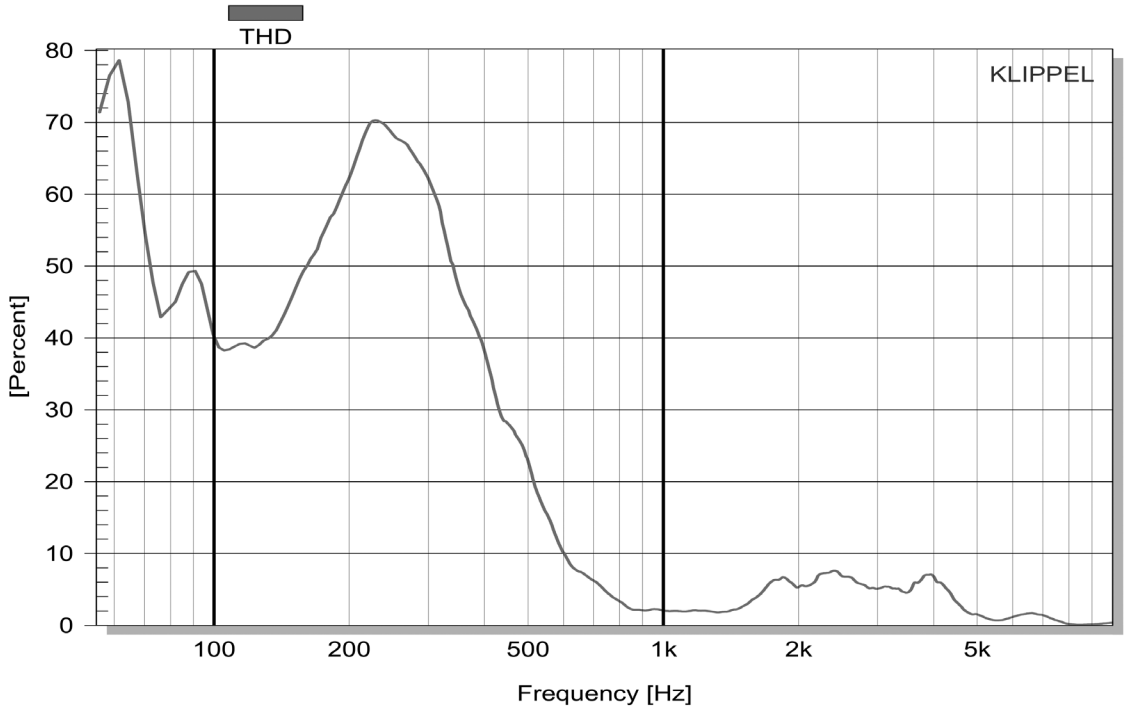

REVISION HISTORY

rev.	description	date
1.0	initial release	07/13/2023

The revision history provided is for informational purposes only and is believed to be accurate.

CUI Devices offers a one (1) year limited warranty. Complete warranty information is listed on our website.

CUI Devices reserves the right to make changes to the product at any time without notice. Information provided by CUI Devices is believed to be accurate and reliable. However, no responsibility is assumed by CUI Devices for its use, nor for any infringements of patents or other rights of third parties which may result from its use.

CUI Devices products are not authorized or warranted for use as critical components in equipment that requires an extremely high level of reliability. A critical component is any component of a life support device or system whose failure to perform can be reasonably expected to cause the failure of the life support device or system, or to affect its safety or effectiveness.

cuidevices.com