MODEL: CMS-4021-34SP-X5 | DESCRIPTION: SPEAKER

FEATURES

- IPX5 rated
- rated 3.0 W
- 4 Ω



SPECIFICATIONS

parameter	conditions/description	min	typ	max	units
input power	max power: as per IEC-268-5		3.0	5.0	W
impedance	at 1.0 kHz, 1 V	3.4	4	4.6	Ω
resonant frequency (Fo)	at 1 V	144	180	216	Hz
frequency response		Fo		20,000	Hz
sound pressure level	at 1 W, 50 cm, avg 0.8, 1.0. 1.6, 2.0 kHz	82	85	88	dB
distortion	at 1 kHz, 1 W			5	%
buzz, rattle, etc.	must be normal at sine wave, frequency range			3.46	V
polarity	cone moves forward w/ positive dc current to “+” terminal				
dimensions	Ø40 x 21				mm
magnet	Nd-Fe-B				
frame material	SPCC				
cone material	PU+paper+PET				
terminal	solder eyelets				
weight			28		g
operating temperature		-20		60	°C
storage temperature		-20		60	°C
hand soldering	for maximum 3 seconds			380	°C
RoHS	yes				
IP level	IPX5 (front side)				

Notes: 1. All specifications measured at 15~35°C, humidity at 25~75%, under 86~106 kPa pressure, unless otherwise noted.

MECHANICAL DRAWING

units: mm
tolerance: ±0.5 mm

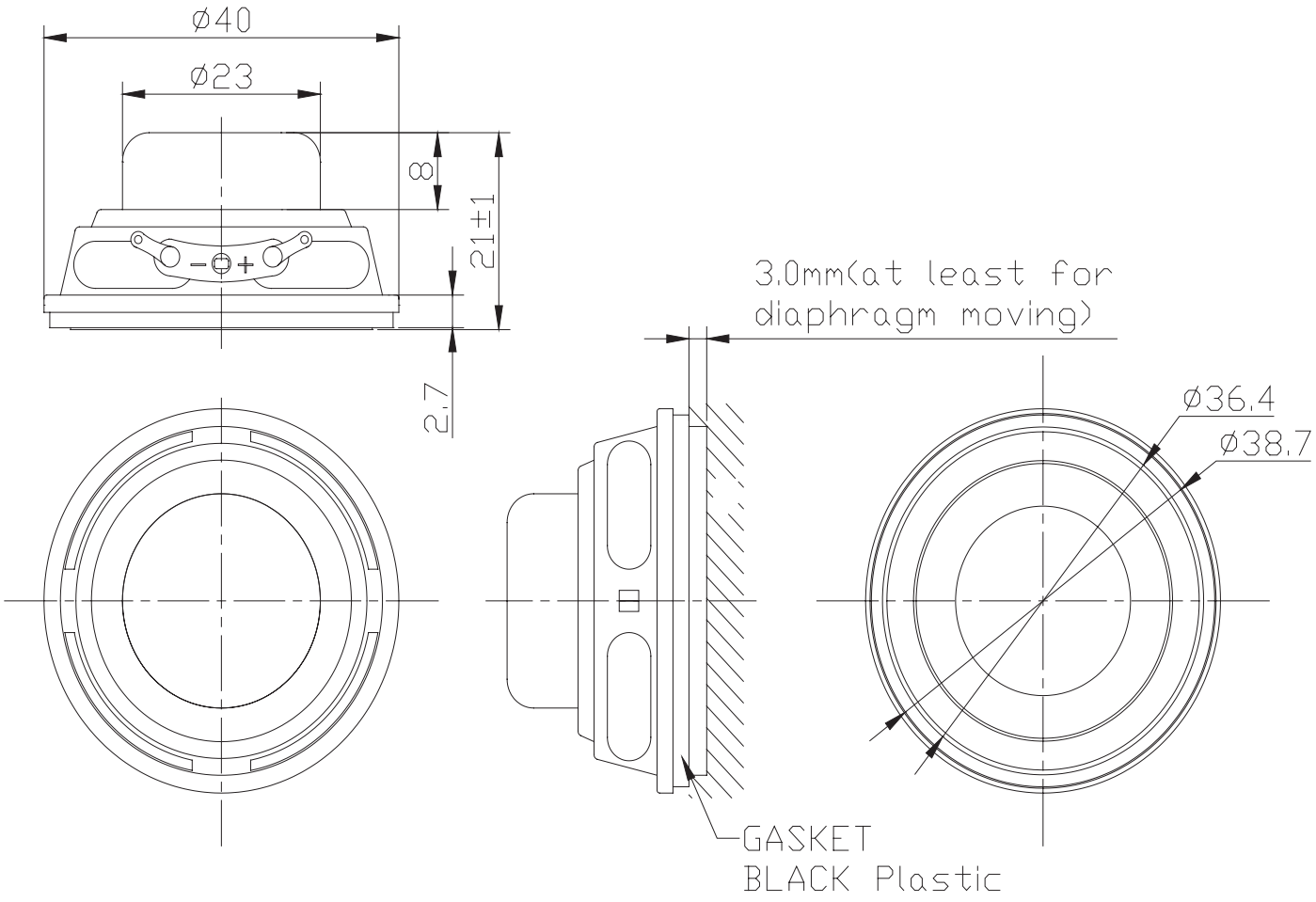

RESPONSE CURVES

Frequency Response Curve

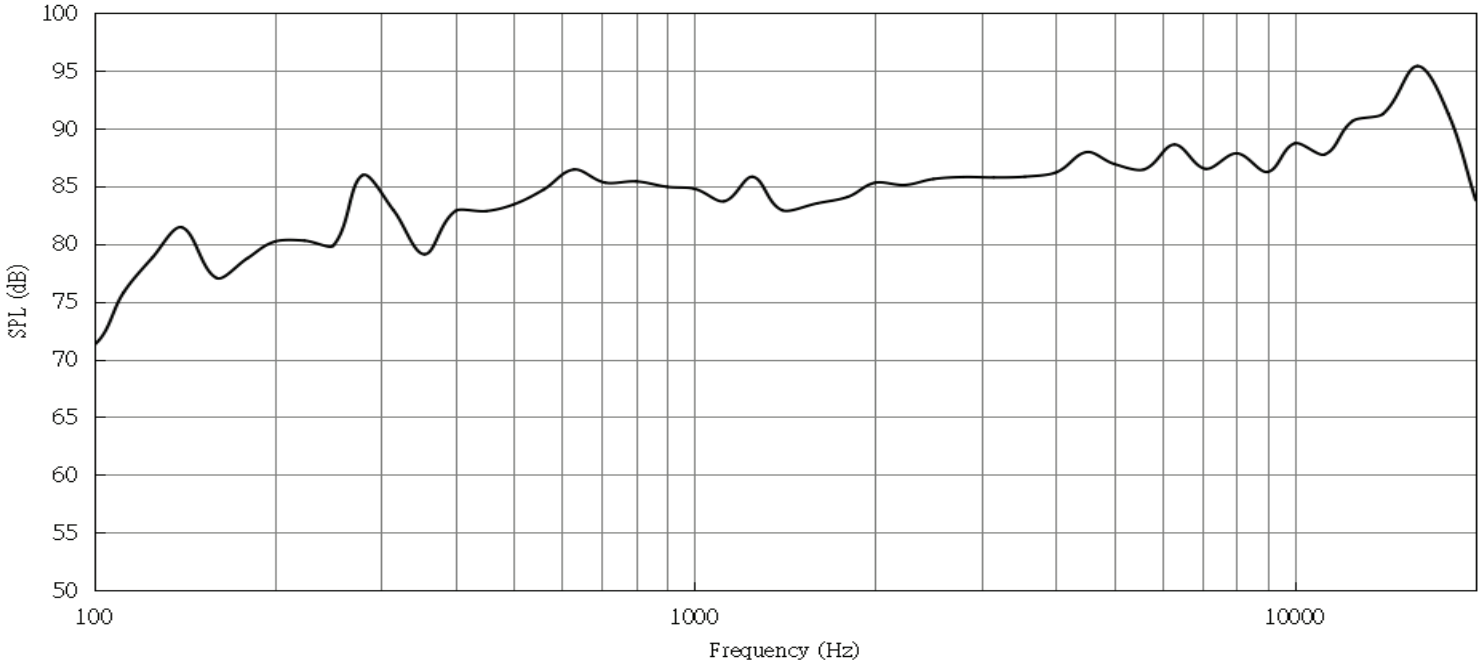

Total Harmonic Distortion Curve

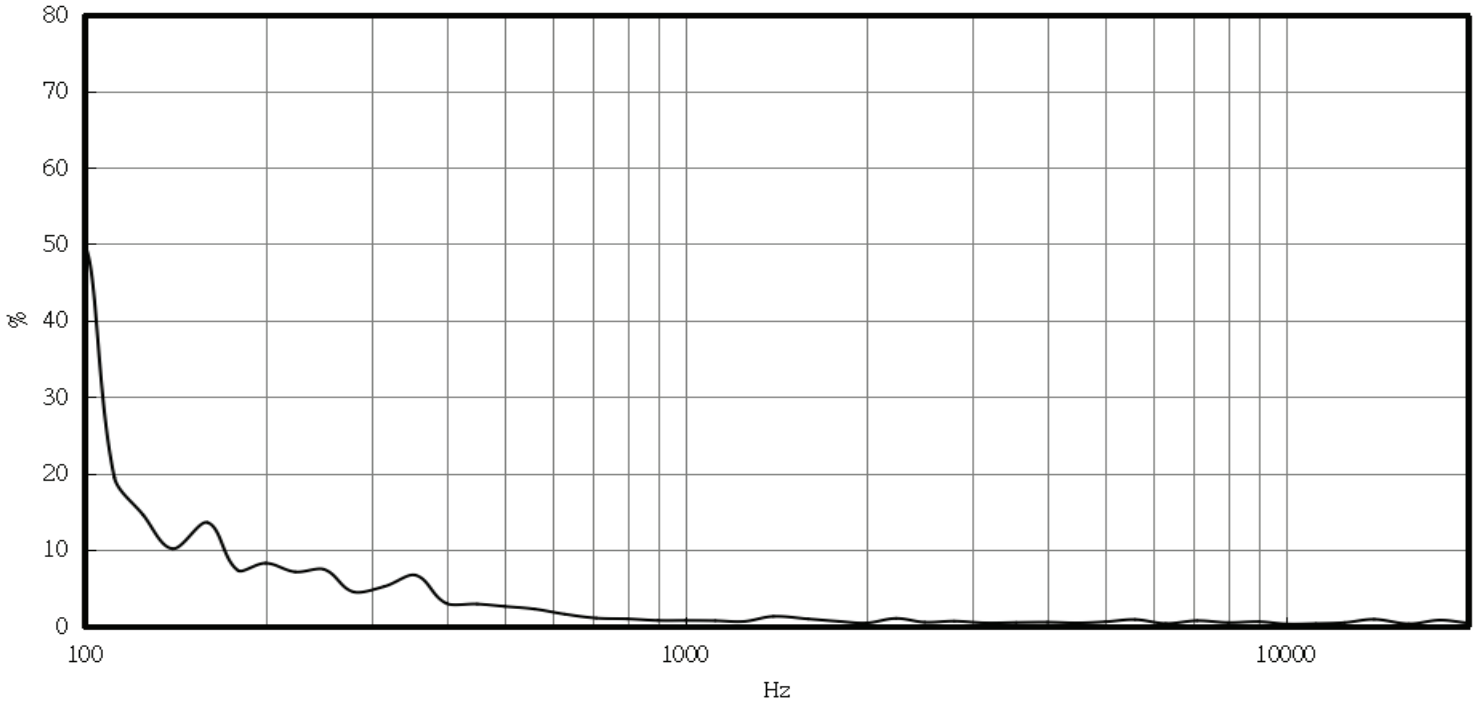

PACKAGING

units: mm

Tray QTY: 60 pcs per tray
Carton Size: 390 x 350 x 430 mm
Carton QTY: 300 pcs per carton

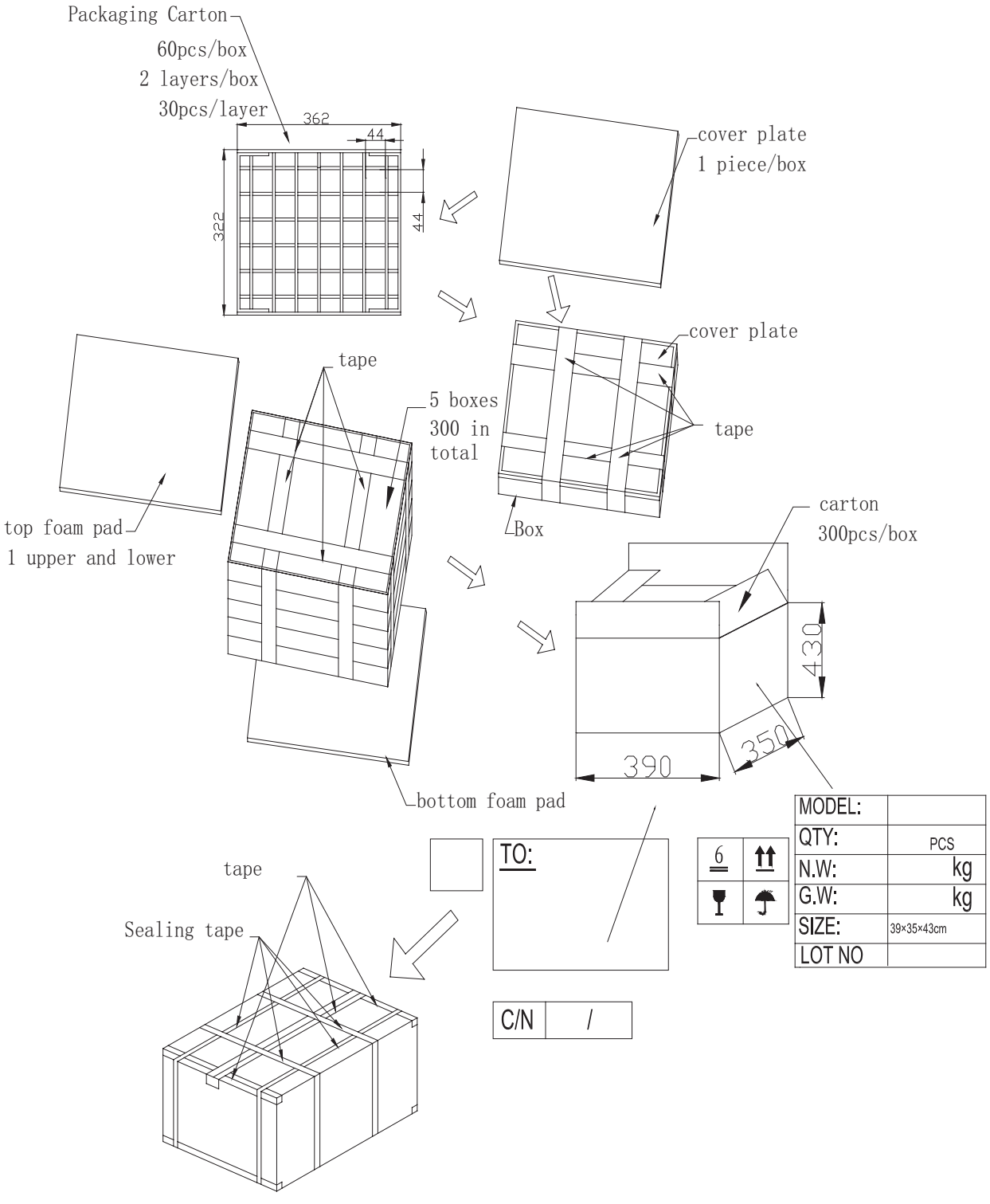

REVISION HISTORY

rev.	description	date
1.0	initial release	03/22/2023

The revision history provided is for informational purposes only and is believed to be accurate.

CUI Devices offers a one (1) year limited warranty. Complete warranty information is listed on our website.

CUI Devices reserves the right to make changes to the product at any time without notice. Information provided by CUI Devices is believed to be accurate and reliable. However, no responsibility is assumed by CUI Devices for its use, nor for any infringements of patents or other rights of third parties which may result from its use.

CUI Devices products are not authorized or warranted for use as critical components in equipment that requires an extremely high level of reliability. A critical component is any component of a life support device or system whose failure to perform can be reasonably expected to cause the failure of the life support device or system, or to affect its safety or effectiveness.

cuidevices.com