# MODEL: CMT-0904-83T | DESCRIPTION: MAGNETIC BUZZER TRANSDUCER

## FEATURES

- through hole
- SPL 83 dB
- magnetic
- externally driven



RoHS

## SPECIFICATIONS

| parameter | conditions/description | min | typ | max | units |
|---|---|---|---|---|---|
| rated voltage | 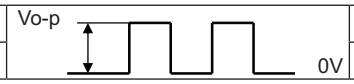  | | 3.0 | | Vo-p |
| operating voltage | | 2.0 | | 5.0 | Vo-p |
| current consumption | at rated voltage, 2,730 Hz, ½ duty square wave | | | 90 | mA |
| rated frequency | | | 2,730 | | Hz |
| sound pressure level | at 10 cm, rated voltage, 2,730 Hz, ½ duty square wave | 83 | | | dB |
| coil resistance | | 13 | 15 | 17 | Ω |
| dimensions | Ø9.0 x 4.8 | | | | mm |
| weight | | | 1.0 | | g |
| material | NORYL | | | | |
| terminal | pins (red copper with gold plating) | | | | |
| operating temperature | | -30 | | 70 | °C |
| storage temperature | | -40 | | 85 | °C |
| RoHS | yes | | | | |

Notes: 1. All specifications measured at 25±3°C, humidity at 60~70%, under 86~106 kPa pressure, unless otherwise noted.

## SOLDERABILITY

| parameter | conditions/description | min | typ | max | units |
|---|---|---|---|---|---|
| wave soldering | see recommended wave soldering profile | | | 250 | °C |

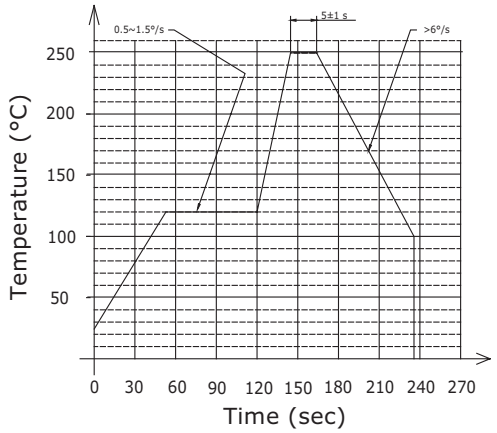

## MECHANICAL DRAWING

units: mm
tolerance: ±0.5 mm

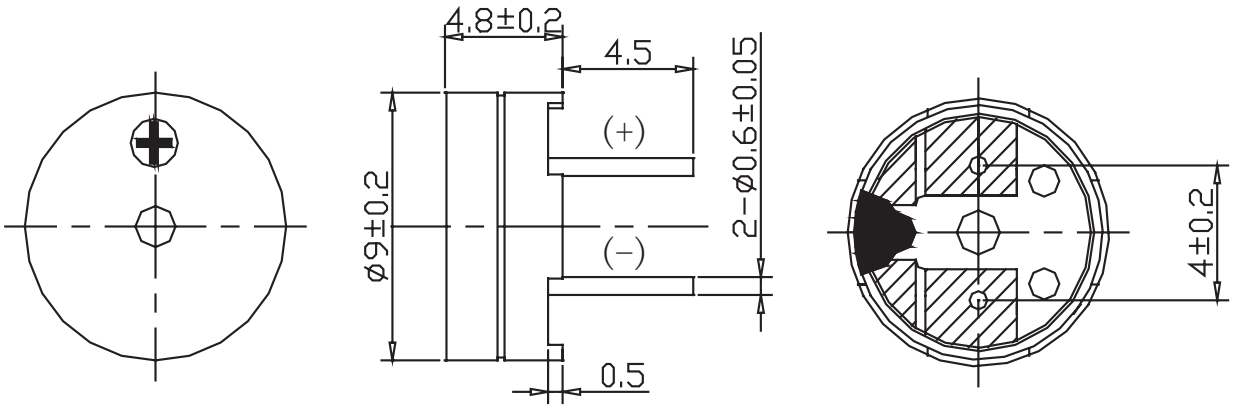


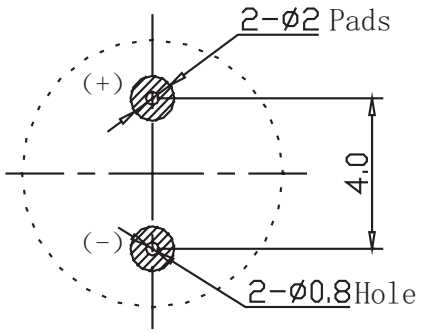


Recommended PCB Layout
Top View

## FREQUENCY RESPONSE CURVE

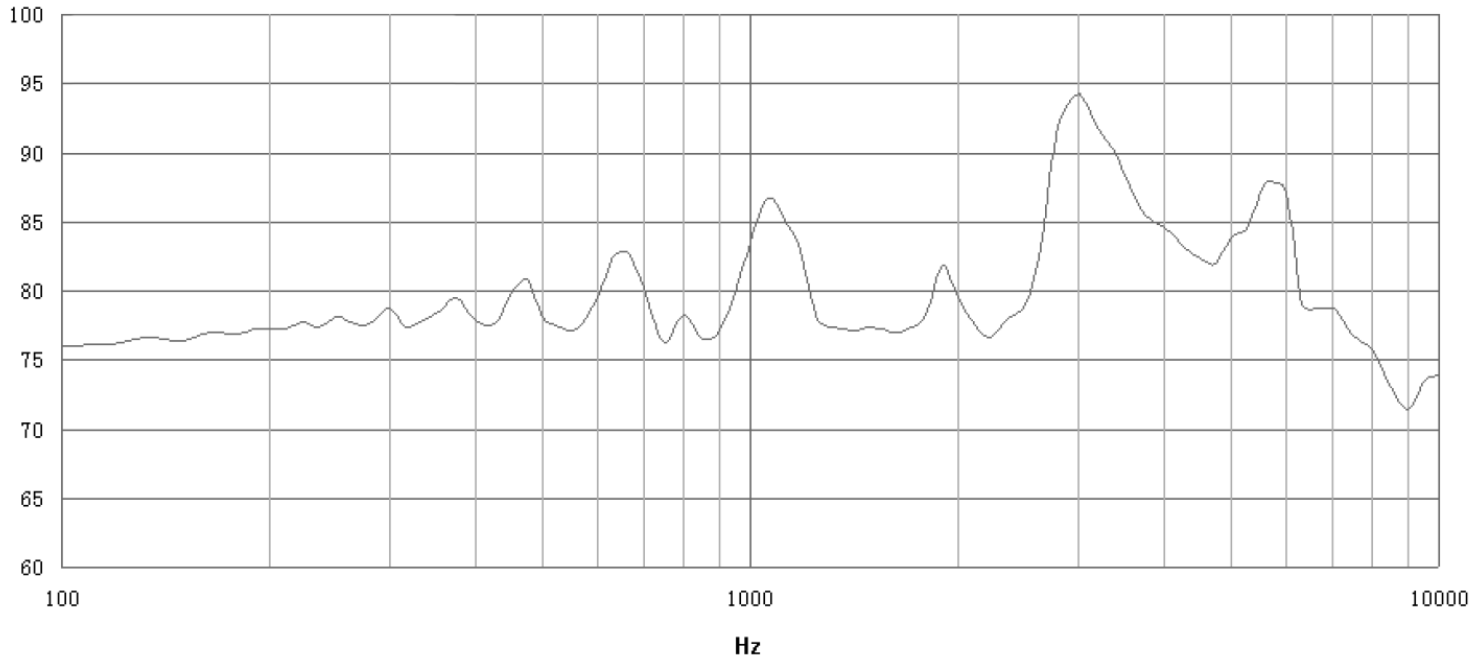


## APPLICATION CIRCUIT

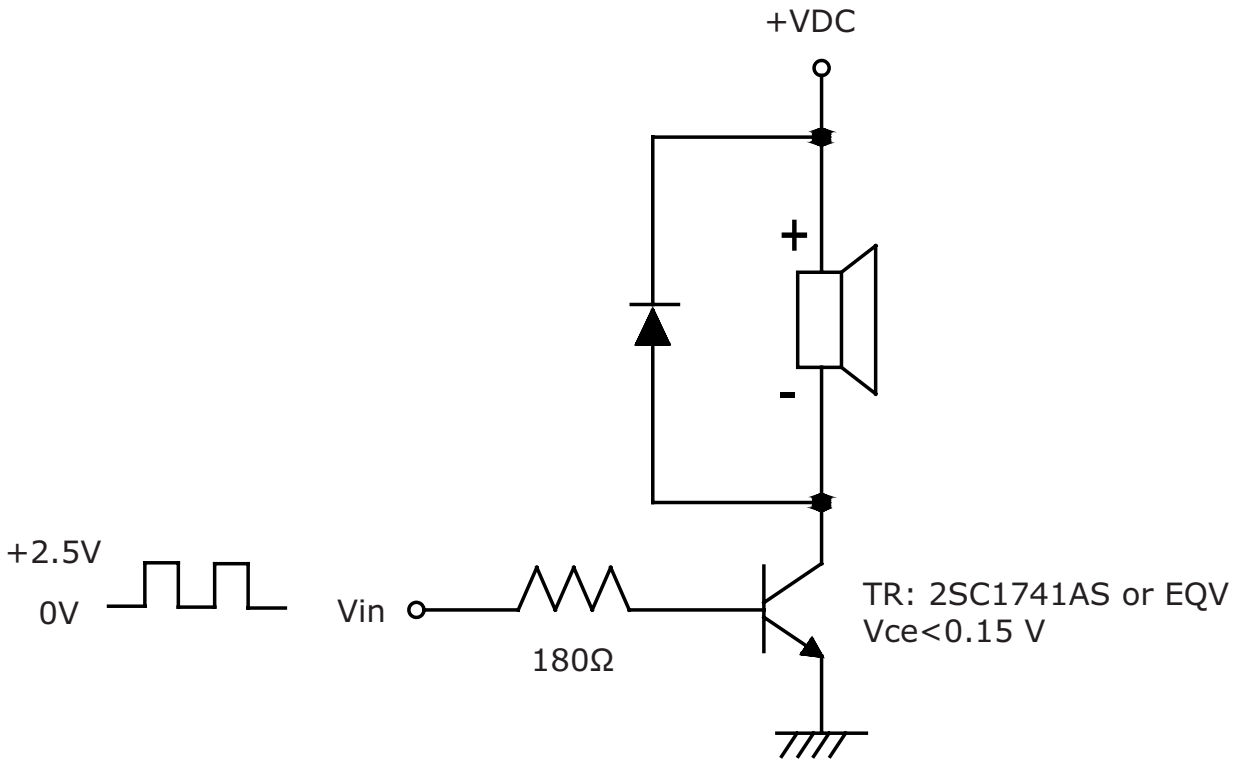

## PACKAGING

units: mm

Carton Size: 505 x 420 x 280 mm
Carton QTY: 7,500 pcs per carton

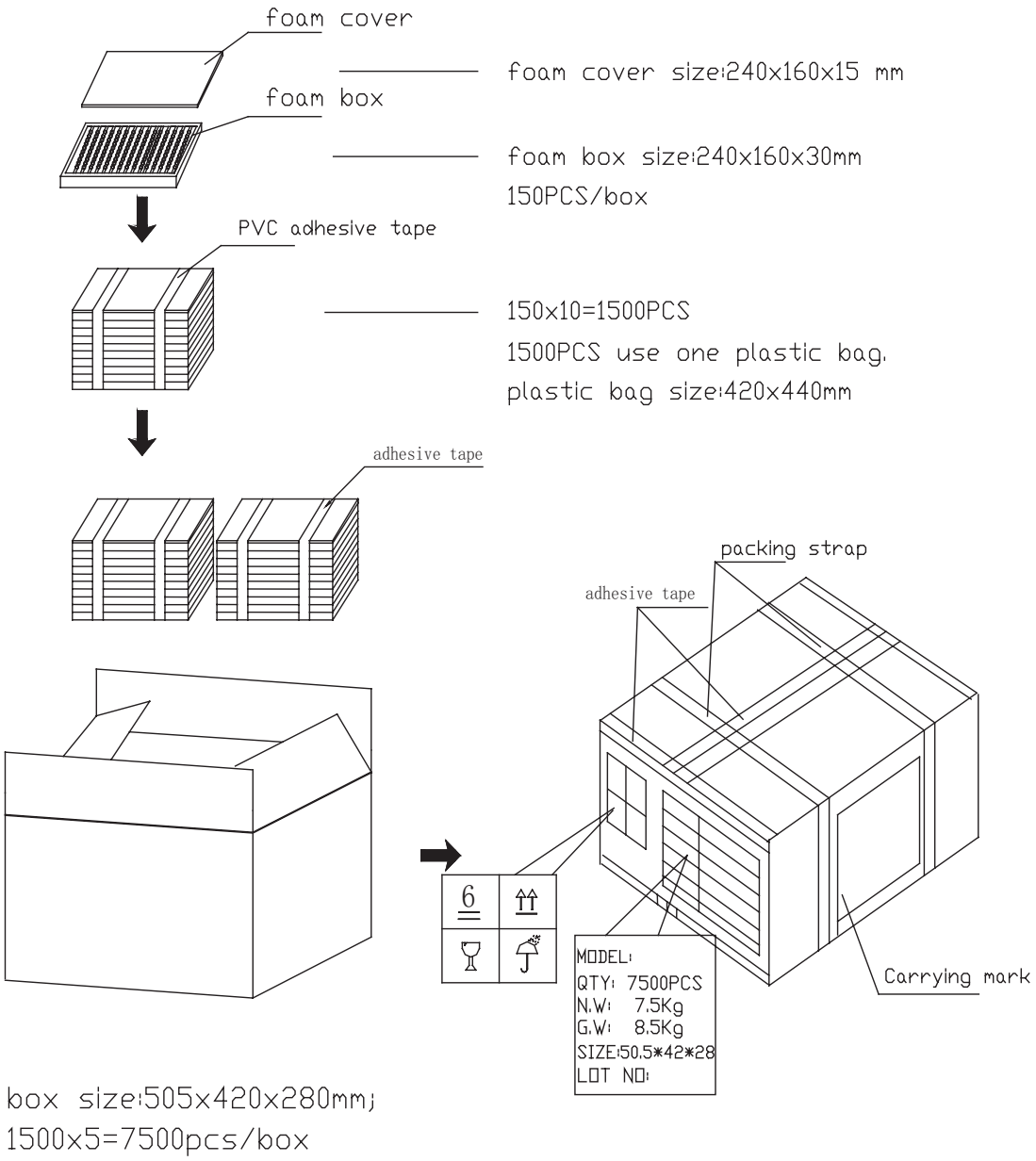

## REVISION HISTORY

| rev. | description | date |
|---|---|---|
| 1.0 | initial release | 07/17/2019 |
| 1.01 | brand update | 12/18/2019 |
| 1.02 | logo, datasheet style update | 08/05/2022 |

The revision history provided is for informational purposes only and is believed to be accurate.

CUI Devices offers a one (1) year limited warranty. Complete warranty information is listed on our website.

CUI Devices reserves the right to make changes to the product at any time without notice. Information provided by CUI Devices is believed to be accurate and reliable. However, no responsibility is assumed by CUI Devices for its use, nor for any infringements of patents or other rights of third parties which may result from its use.

CUI Devices products are not authorized or warranted for use as critical components in equipment that requires an extremely high level of reliability. A critical component is any component of a life support device or system whose failure to perform can be reasonably expected to cause the failure of the life support device or system, or to affect its safety or effectiveness.

**cuidevices.com**