MODEL: CMT-0904-85T | DESCRIPTION: MAGNETIC BUZZER TRANSDUCER

FEATURES

- through hole
- SPL 85 dB
- magnetic
- externally driven



RoHS

SPECIFICATIONS

parameter	conditions/description	min	typ	max	units
rated voltage	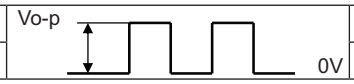		3.0		Vo-p
operating voltage		2.0		4.0	Vo-p
current consumption	at rated voltage, 2,730 Hz, ½ duty square wave			90	mA
rated frequency			2,730		Hz
sound pressure level	at 10 cm, rated voltage, 2,730 Hz, ½ duty square wave	85			dB
coil resistance		12	15	18	Ω
dimensions	Ø9.0 x 4				mm
weight			1.0		g
material	NORYL				
terminal	pins (red copper with gold plating)				
operating temperature		-30		70	°C
storage temperature		-40		85	°C
RoHS	yes				

Notes: 1. All specifications measured at 25±3°C, humidity at 60~70%, under 86~106 kPa pressure, unless otherwise noted.

SOLDERABILITY

parameter	conditions/description	min	typ	max	units
wave soldering	see recommended wave soldering profile			250	°C

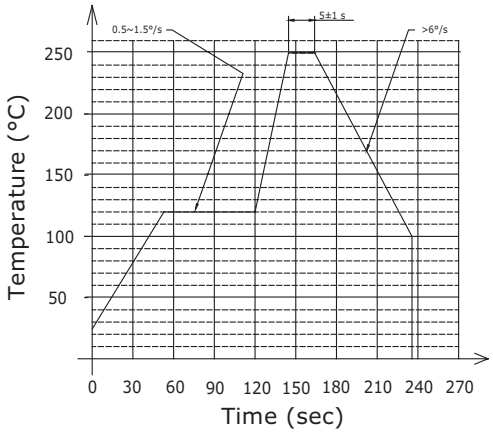

MECHANICAL DRAWING

units: mm
tolerance: ±0.5 mm

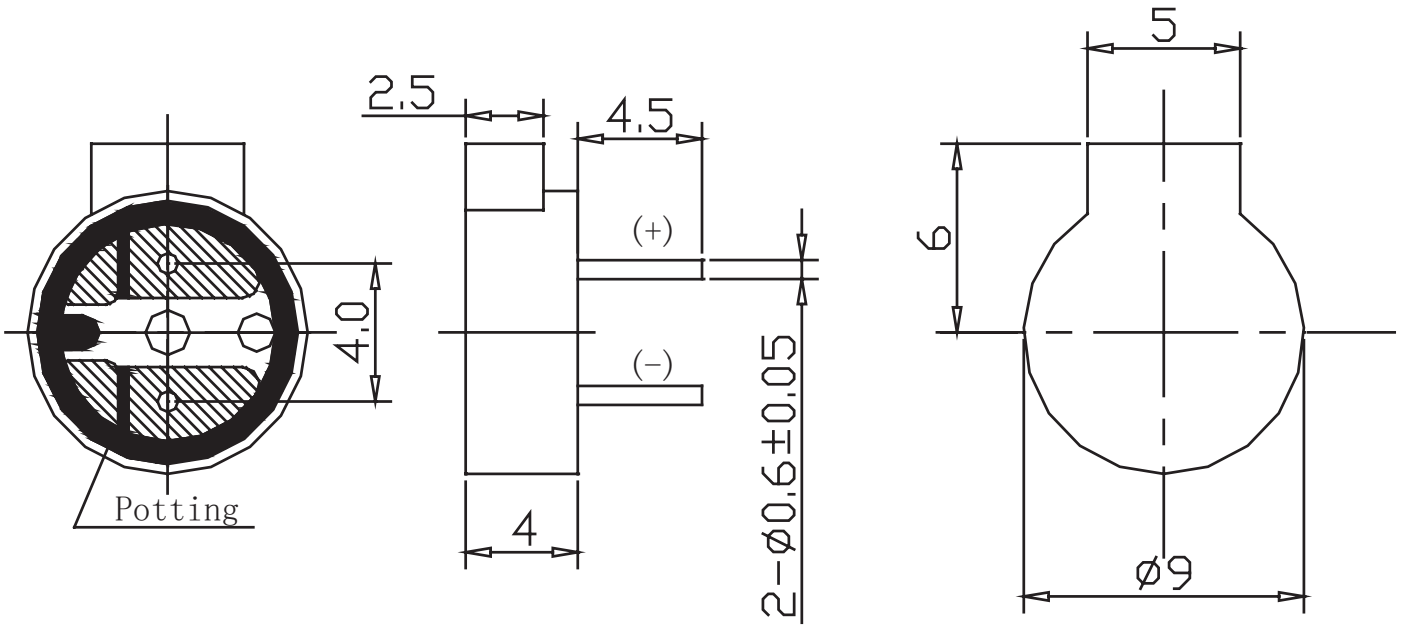

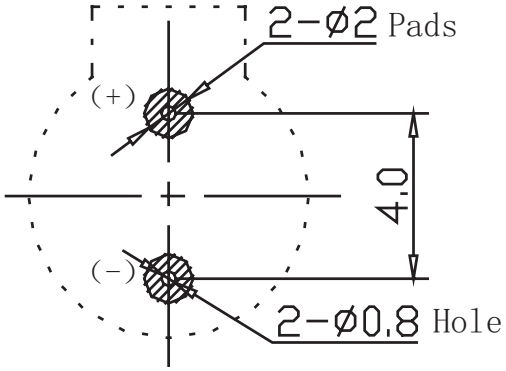

Recommended PCB Layout
Top View

FREQUENCY RESPONSE CURVE

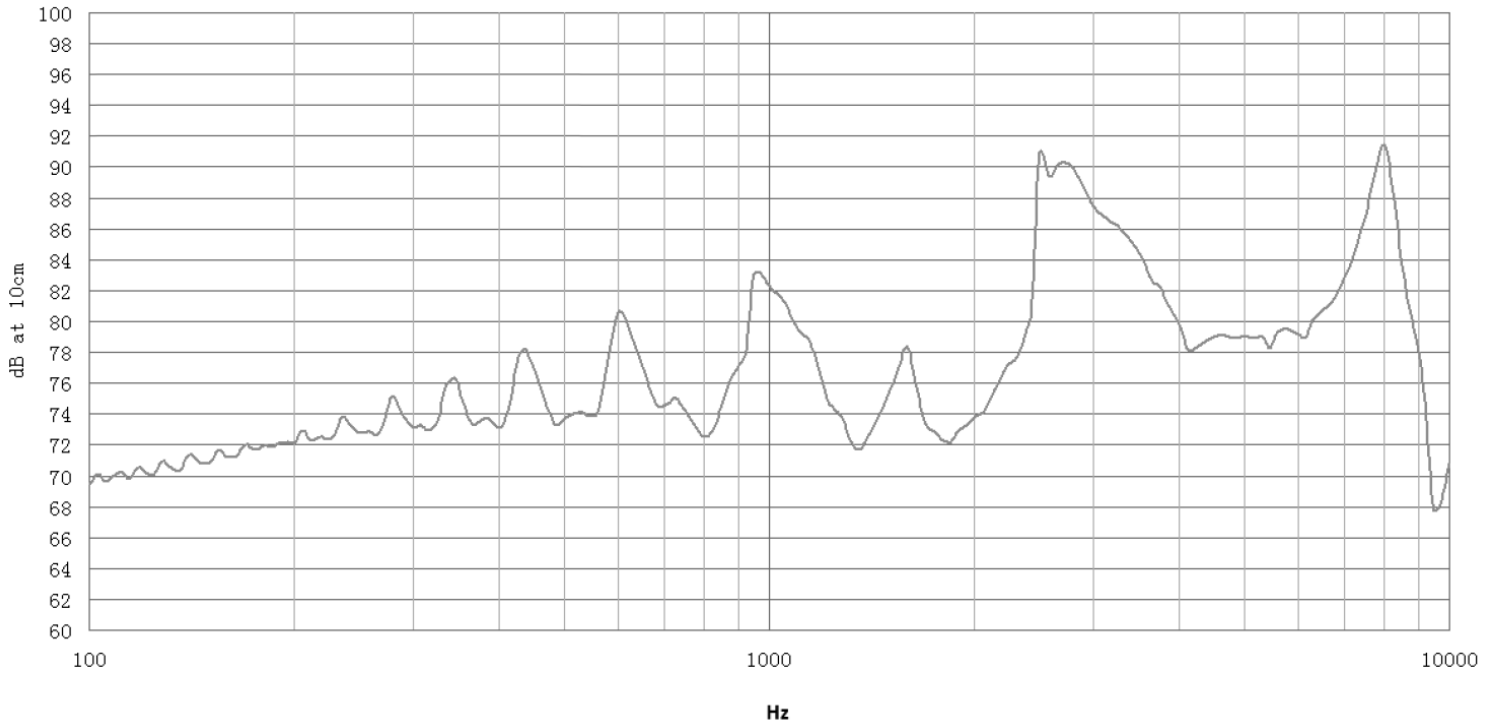

APPLICATION CIRCUIT

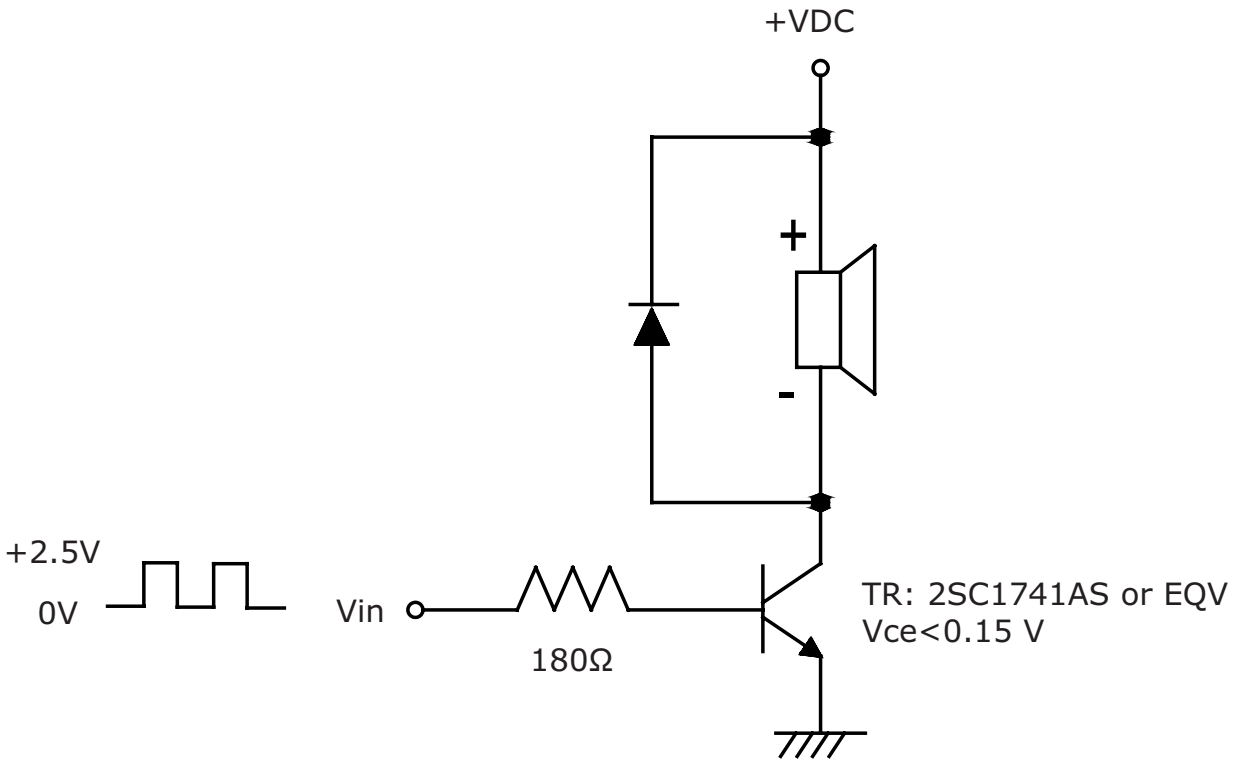

PACKAGING

units: mm

Carton Size: 505 x 420 x 280 mm
Carton QTY: 7,500 pcs per carton

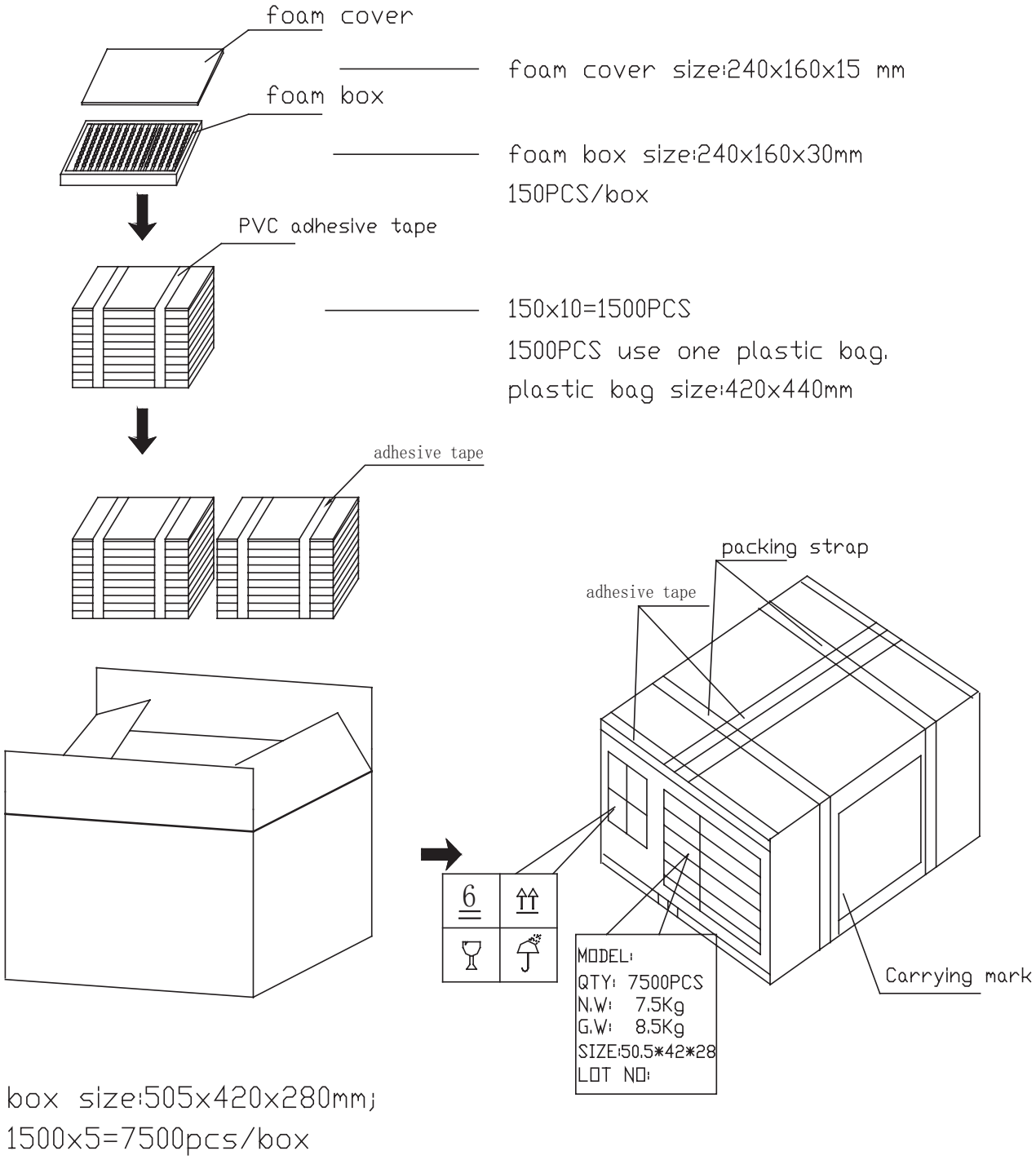

REVISION HISTORY

rev.	description	date
1.0	initial release	07/17/2019
1.01	brand update	12/18/2019
1.02	logo, datasheet style update	08/05/2022

The revision history provided is for informational purposes only and is believed to be accurate.

CUI Devices offers a one (1) year limited warranty. Complete warranty information is listed on our website.

CUI Devices reserves the right to make changes to the product at any time without notice. Information provided by CUI Devices is believed to be accurate and reliable. However, no responsibility is assumed by CUI Devices for its use, nor for any infringements of patents or other rights of third parties which may result from its use.

CUI Devices products are not authorized or warranted for use as critical components in equipment that requires an extremely high level of reliability. A critical component is any component of a life support device or system whose failure to perform can be reasonably expected to cause the failure of the life support device or system, or to affect its safety or effectiveness.

cuidevices.com