CUDEVICES

MODEL: CMT-1085-85-SMT-TR | **DESCRIPTION:** MAGNETIC BUZZER TRANSDUCER

FEATURES

- magnetic
- low profile
- tape and reel

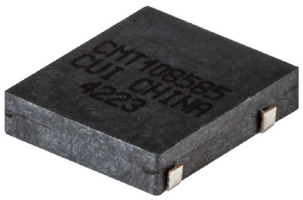

RoHS

SPECIFICATIONS

parameter	conditions/description	min	typ	max	units
rated voltage	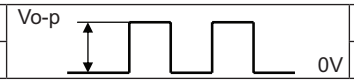		3.6		Vo-p
operating voltage		2.5		4.5	Vo-p
current consumption	at rated voltage, 2,730 Hz, ½ duty square wave			100	mA
rated frequency			2,730		Hz
sound pressure level	at 10 cm, rated voltage, 2,730 Hz, ½ duty square wave	80	85		dBA
coil resistance		13	16	19	Ω
dimensions	10 x 8.5 x 2.0				mm
weight			0.6		g
material	LCP (black)				
terminal	surface mount (tin plating)				
operating temperature		-40		85	°C
storage temperature		-40		85	°C
washable	no				
RoHS	yes				

Notes: 1. All specifications measured at 5~35 °C, humidity at 45~85%, under 86~106 kPa pressure, unless otherwise noted.

MECHANICAL DRAWING

units: mm
tolerance: ±0.5 mm

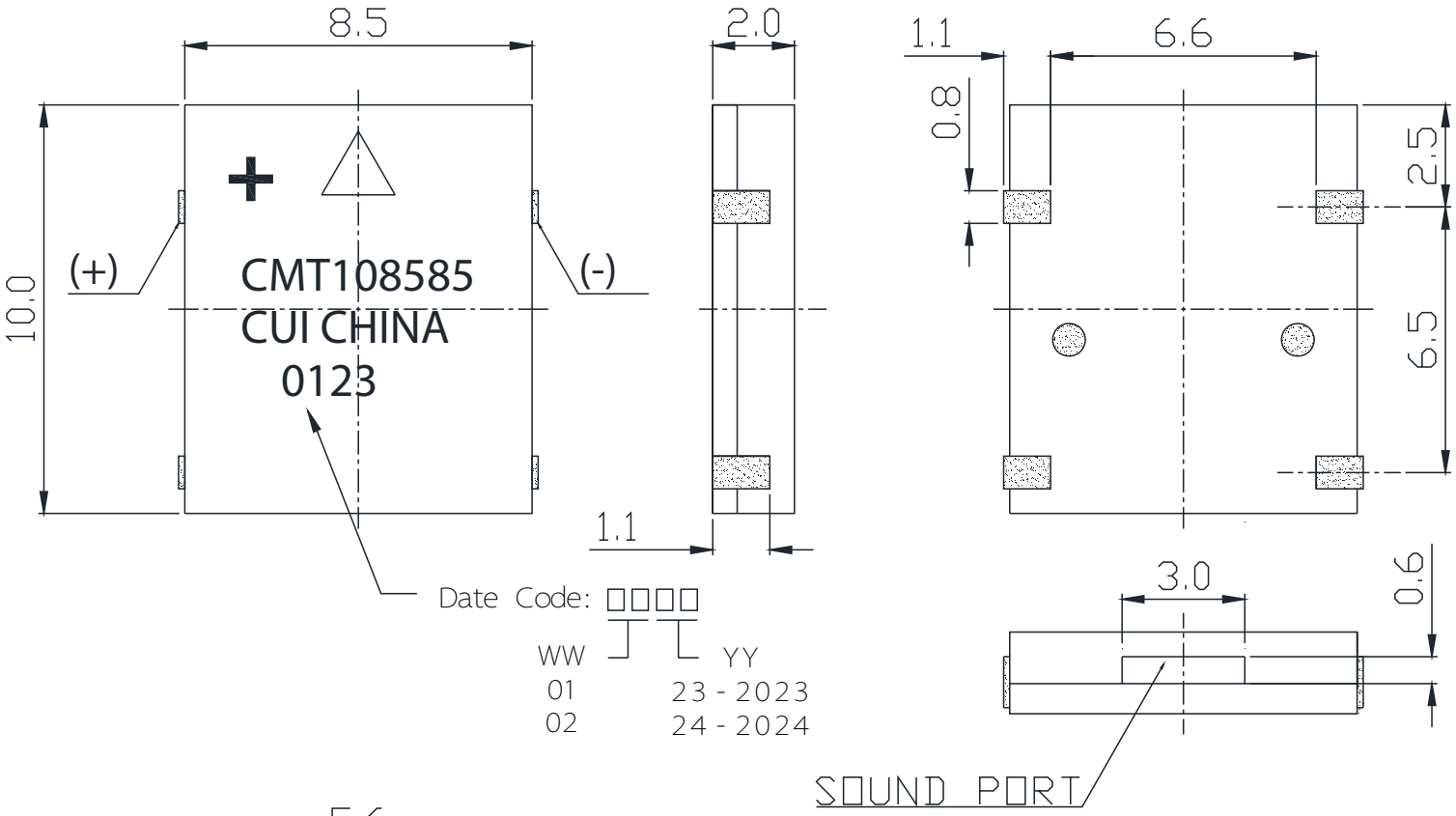

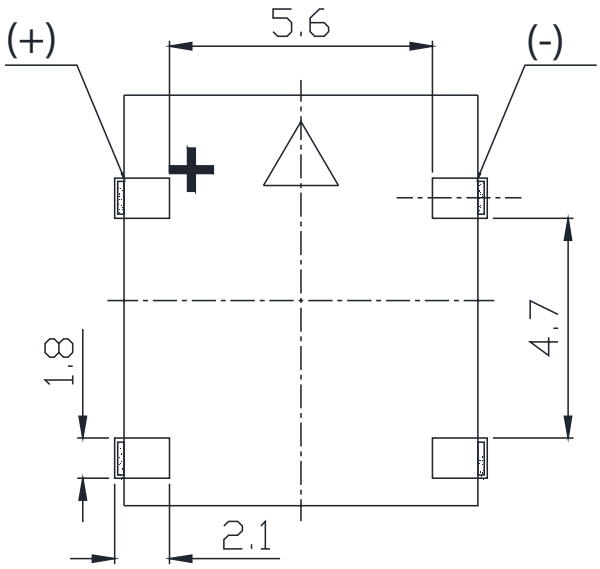

Recommended PCB Layout
Top View

FREQUENCY RESPONSE CURVE

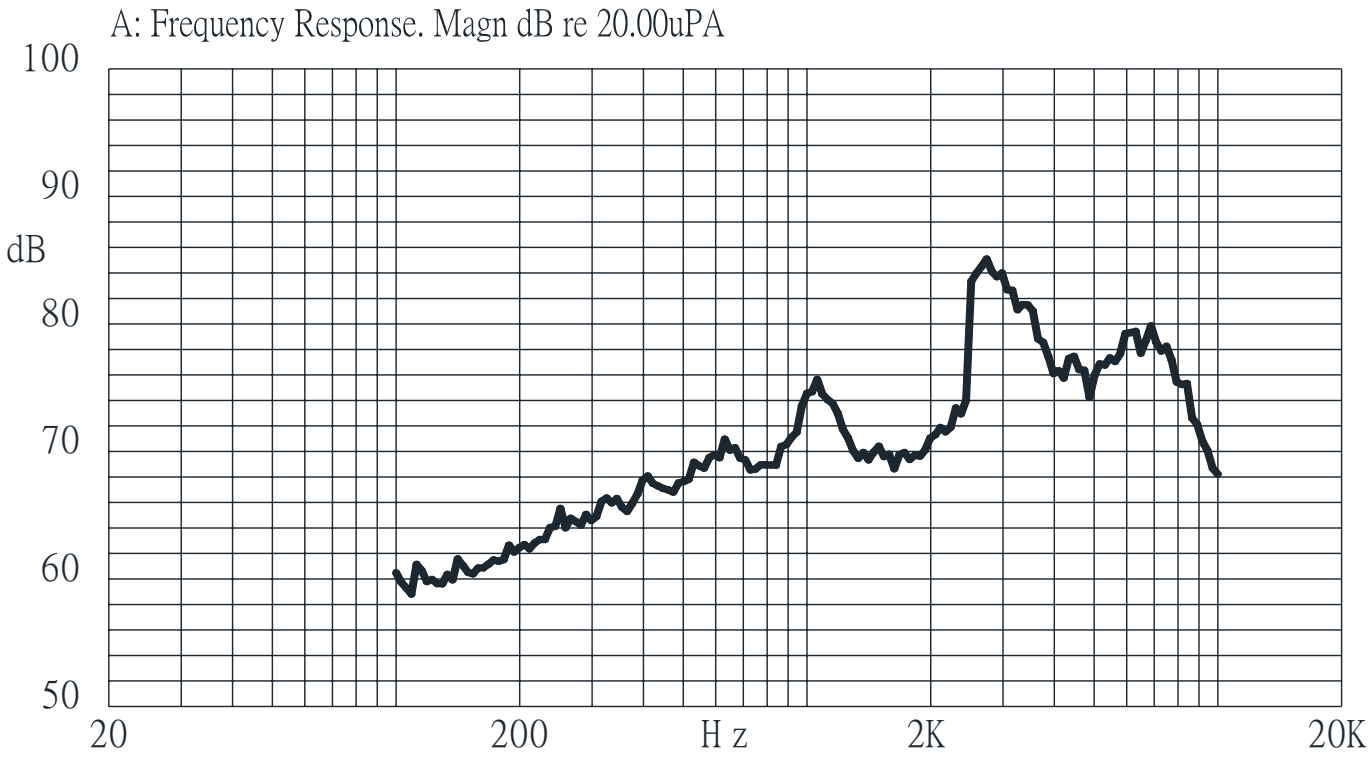

APPLICATION CIRCUIT

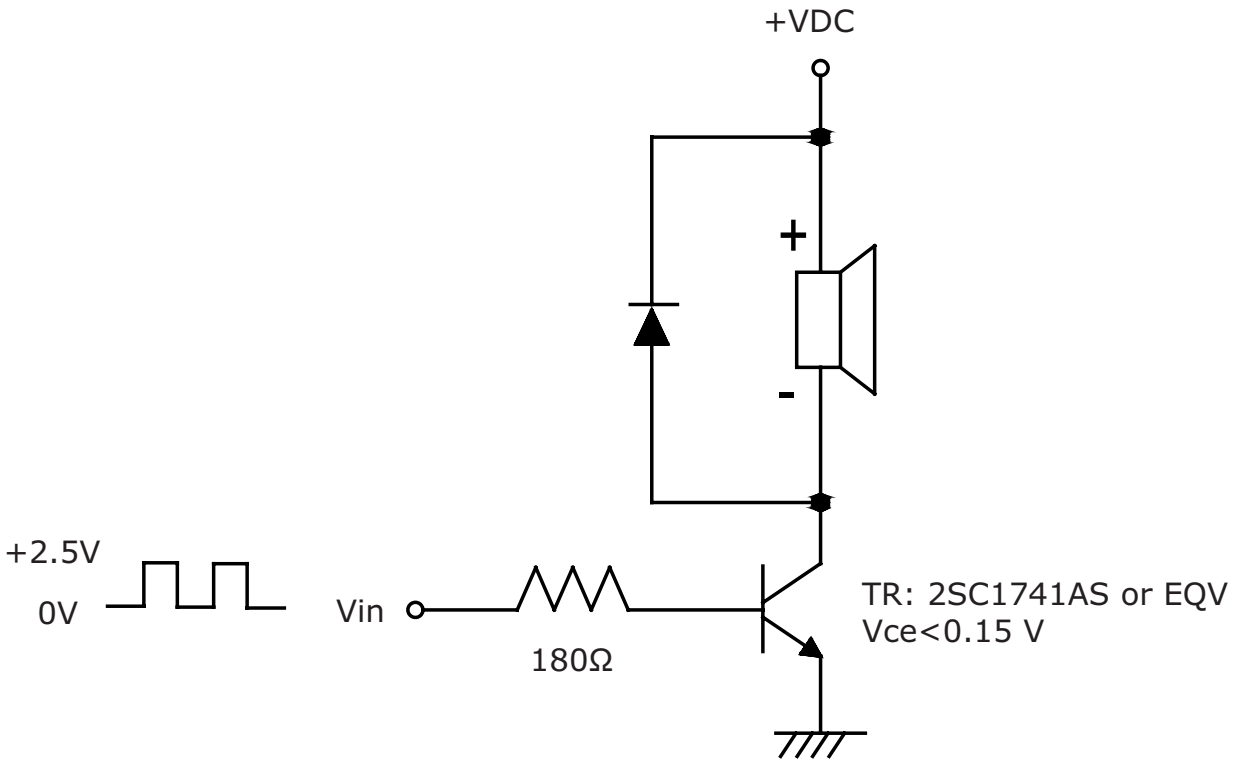

SOLDERABILITY

parameter	conditions/description	min	typ	max	units
reflow soldering[4]	as per IPC/JEDEC J-STD-020C		240	245	°C
drying conditions[5]	bake at 40°C for 24 hours				

Note:
2. Not suitable for wash process.
3. It is recommended to reflow solder only once.
4. It is recommended to reflow solder within 48 hours from opening vacuum packaging at a temperature <30°C & relative humidity <60%.
5. When out of packaging for more than 48 hours.

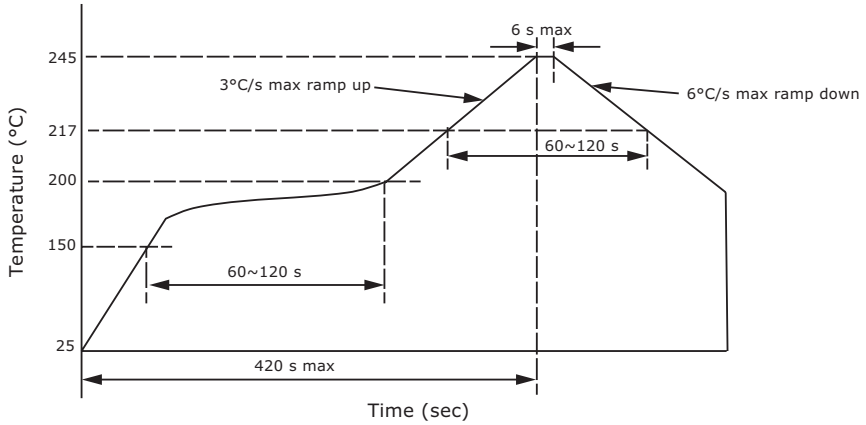

PACKAGING

parameter	conditions/description	min	typ	max	units
reel storage[6]	at relative humidity 15~85%	-10		40	°C
MSL	Class 4				
reel QTY	1,000				
carton QTY	10,000				

Note:
6. Recommended floor life (out of sealed bag) at <30°C, 60%RH is 72 hours.

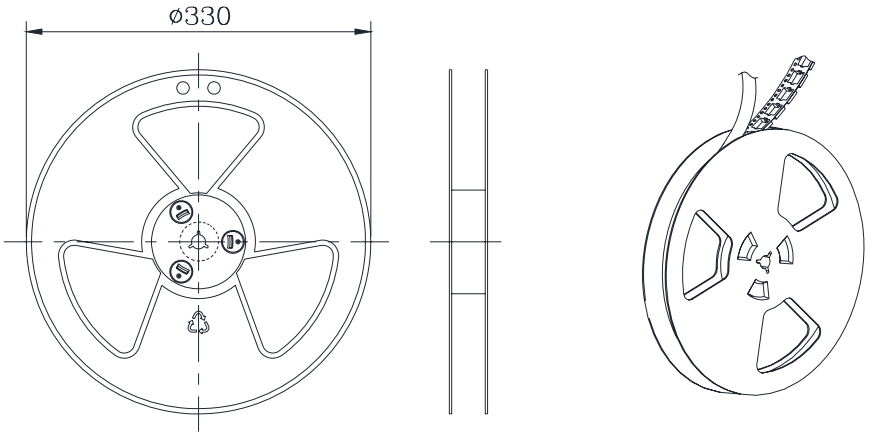

1 Reel : 1000PCS

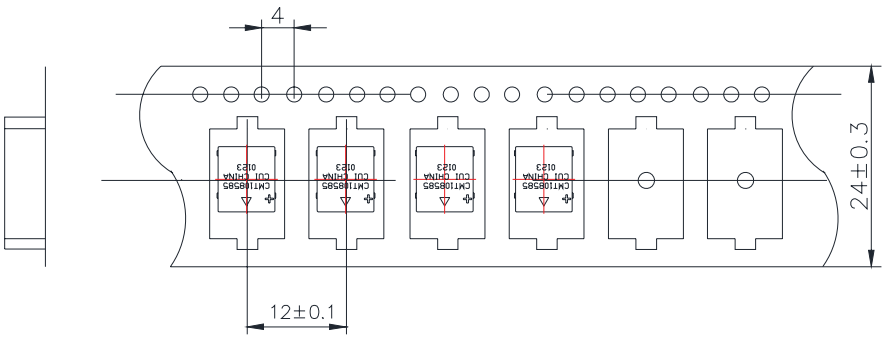

REVISION HISTORY

rev.	description	date
1.0	initial release	12/19/2023

The revision history provided is for informational purposes only and is believed to be accurate.

CUI Devices offers a one (1) year limited warranty. Complete warranty information is listed on our website.

CUI Devices reserves the right to make changes to the product at any time without notice. Information provided by CUI Devices is believed to be accurate and reliable. However, no responsibility is assumed by CUI Devices for its use, nor for any infringements of patents or other rights of third parties which may result from its use.

CUI Devices products are not authorized or warranted for use as critical components in equipment that requires an extremely high level of reliability. A critical component is any component of a life support device or system whose failure to perform can be reasonably expected to cause the failure of the life support device or system, or to affect its safety or effectiveness.

cuidevices.com