CUI Devices is now Same Sky! Learn More

MODEL: CMT-1102-SMT-TR | DESCRIPTION: PIEZO BUZZER TRANSDUCER

FEATURES

- low current
- low profile
- externally driven

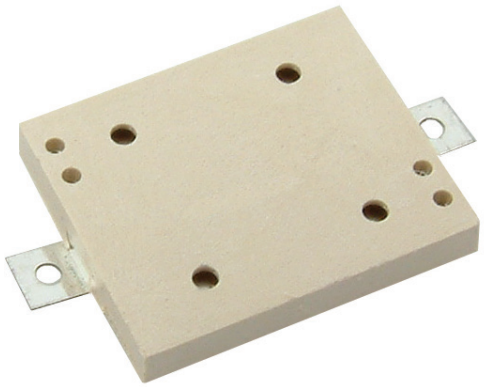

RoHS

SPECIFICATIONS

parameter	conditions/description	min	typ	max	units
operating voltage				25	Vp-p
current consumption	at 5 Vp-p, 4,100 Hz square wave			4.5	mA
rated frequency			4,100		Hz
sound pressure level	at 10 cm, 5 Vp-p, 4,100 Hz square wave	73			dB
electrostatic capacity	at 1 kHz/1 V	8,400	12,000	15,600	pF
dimensions	11 x 9 x 1.7				mm
weight				0.5	g
material	LCP (white)				
terminal	SMT type (Sn plating)				
operating temperature		-40		80	°C
storage temperature		-40		80	°C
RoHS	yes				

Notes: 1. All specifications measured at 5~35°C, humidity at 45~85%, under 86~106 kPa pressure, unless otherwise noted.

SOLDERABILITY

parameter	conditions/description	min	typ	max	units
reel storage	at relative humidity <40%			25	°C
reflow soldering[2]	see recommended reflow soldering profile			260	°C
drying conditions[3]	bake at 40°C for 24 hours				

Note: 2. It is recommended to reflow solder within 48 hours from opening vacuum packaging at a temperature <30°C & relative humidity <60%.
3. When out of packaging for more than 48 hours.

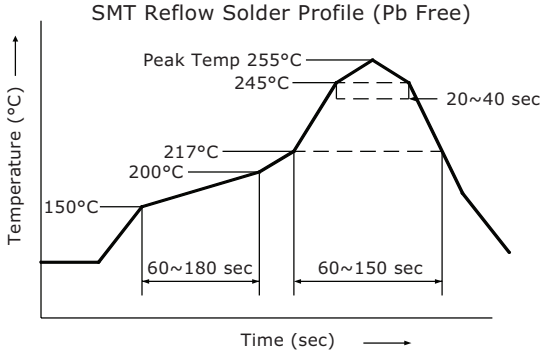

MECHANICAL DRAWING

units: mm
tolerance: ±0.3 mm

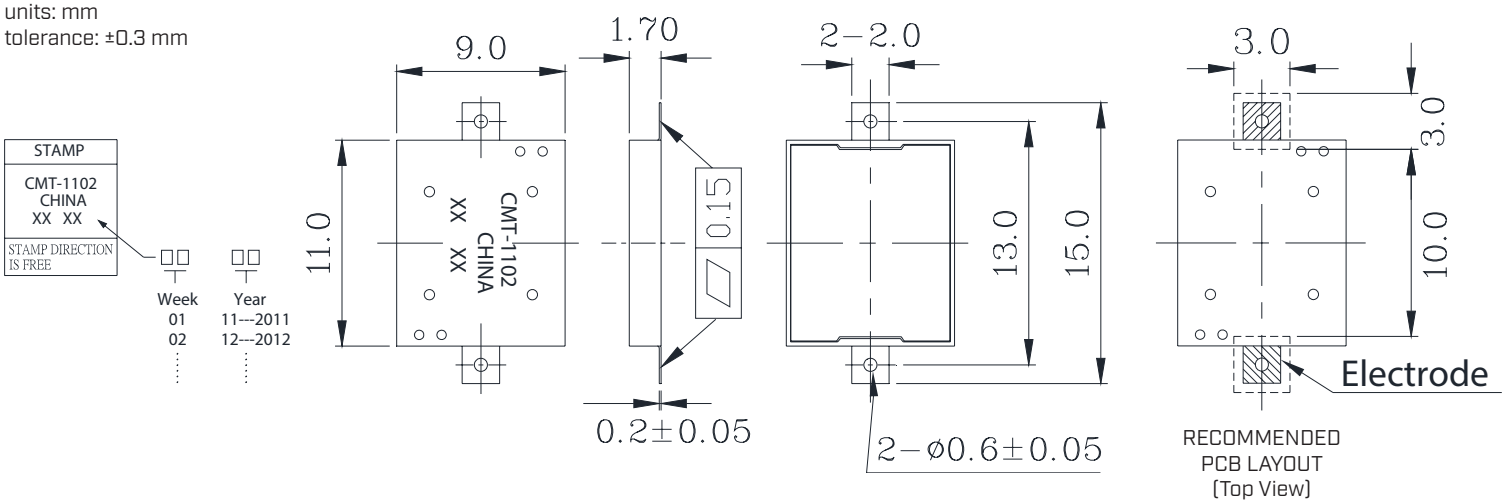

FREQUENCY RESPONSE CURVE

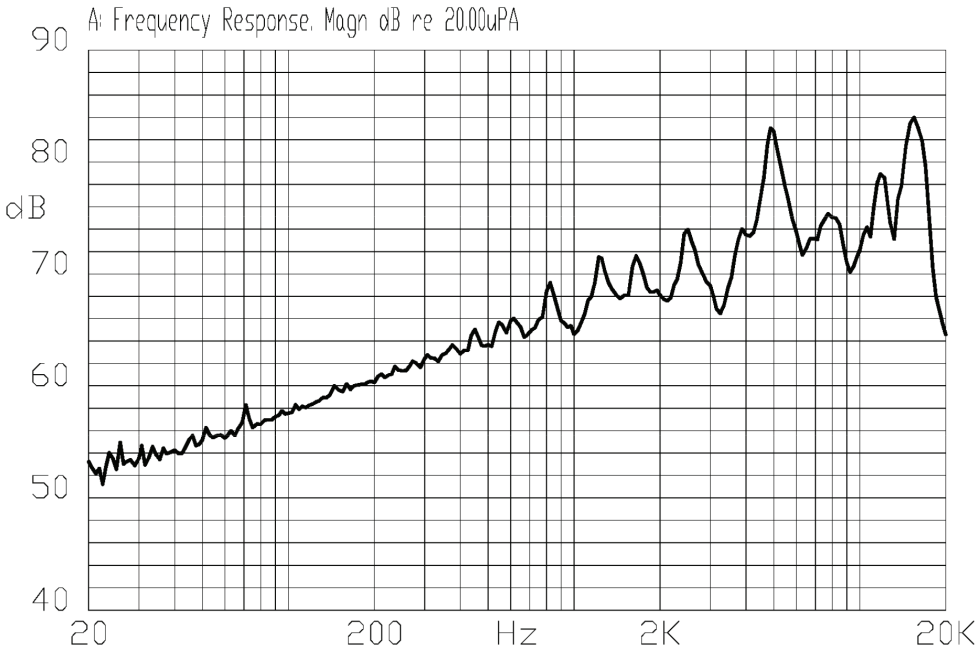

MEASUREMENT METHOD

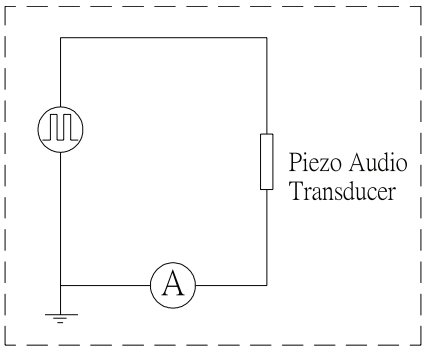

PACKAGING

units: mm

Reel Size: Ø330 mm
Inner Box Size: 340 x 340 x 40 mm
Carton Size: 350 x 175 x 355 mm
Reel QTY: 2,000 pcs per reel
Carton QTY: 10,000 pcs per carton

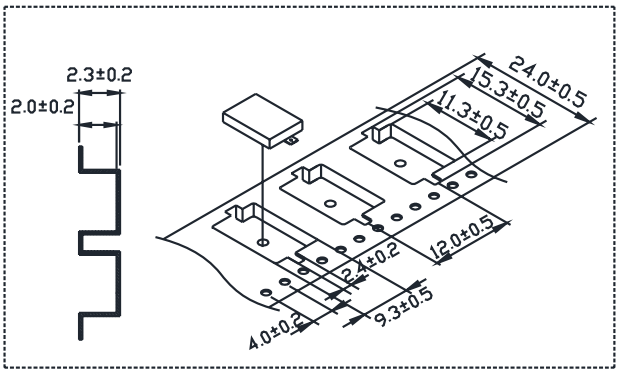

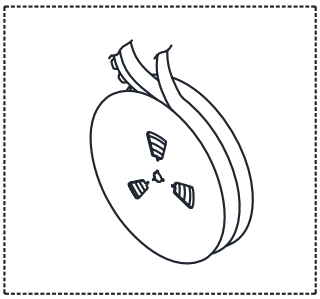

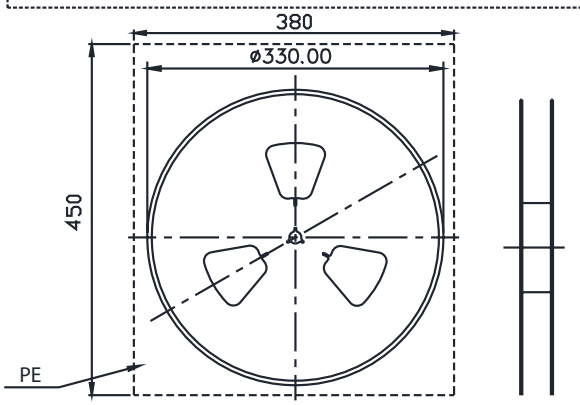

Lot No.	XXXXXXXXXX
Model No.	XXXXXXXXXX
Quantity.	XXXX Pcs
Date: DD MM YY MADE IN CHINA G	

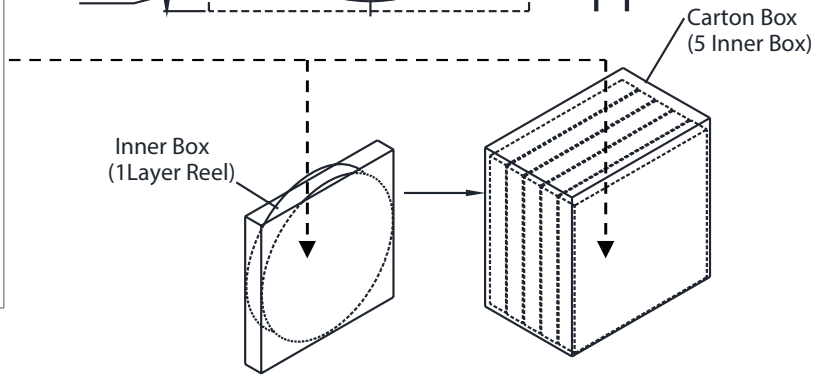

* The label sticked on inner boxes and the outer of carton.

REVISION HISTORY

rev.	description	date
1.0	initial release	09/19/2006
1.01	applied new template	09/04/2007
1.02	updated part number, added TR package option, applied new spec template	05/06/2013
1.03	added storage and drying conditions, and tape and reel packaging details	07/31/2019
1.04	brand update	01/06/2020
1.05	logo, datasheet style update	08/05/2022
1.06	CUI Devices rebranded to Same Sky	09/11/2024

The revision history provided is for informational purposes only and is believed to be accurate.

same sky

Same Sky offers a one (1) year limited warranty. Complete warranty information is listed on our website.

Same Sky reserves the right to make changes to the product at any time without notice. Information provided by Same Sky is believed to be accurate and reliable. However, no responsibility is assumed by Same Sky for its use, nor for any infringements of patents or other rights of third parties which may result from its use.

Same Sky products are not authorized or warranted for use as critical components in equipment that requires an extremely high level of reliability. A critical component is any component of a life support device or system whose failure to perform can be reasonably expected to cause the failure of the life support device or system, or to affect its safety or effectiveness.

sameskydevices.com