MODEL: CMT-1295-85T | DESCRIPTION: MAGNETIC BUZZER TRANSDUCER

FEATURES

- magnetic
- 90 dB @ 0.1 m
- through hole



SPECIFICATIONS

parameter	conditions/description	min	typ	max	units
rated voltage	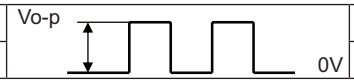		3.0		Vo-p
operating voltage		2.0		5.0	Vo-p
current consumption	at rated voltage, 2,400Hz, ½ duty square wave			45	mA
rated frequency			2,400		Hz
sound pressure level	at 10 cm, rated voltage, 2,400 Hz, ½ duty square wave	85	90		dBA
coil resistance		25	30	35	Ω
dimensions	Ø12.0 x 9.5				mm
weight			1.55		g
material	PBT (black)				
terminal	pins (tin plating)				
operating temperature		-40		85	°C
storage temperature		-40		85	°C
washable	yes				
RoHS	yes				

Notes: 1. All specifications measured at 5~35 °C, humidity at 45~85%, under 86~106 kPa pressure, unless otherwise noted.

SOLDERABILITY

parameter	conditions/description	min	typ	max	units
hand soldering	for maximum 3 seconds	330		360	°C
wave soldering	see recommended wave soldering profile			250	°C

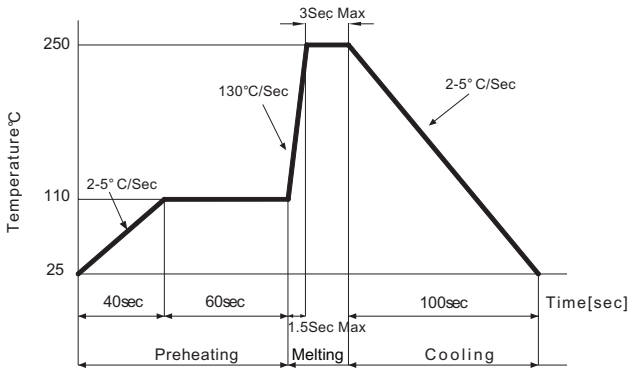

MECHANICAL DRAWING

units: mm
tolerance: ±0.5 mm

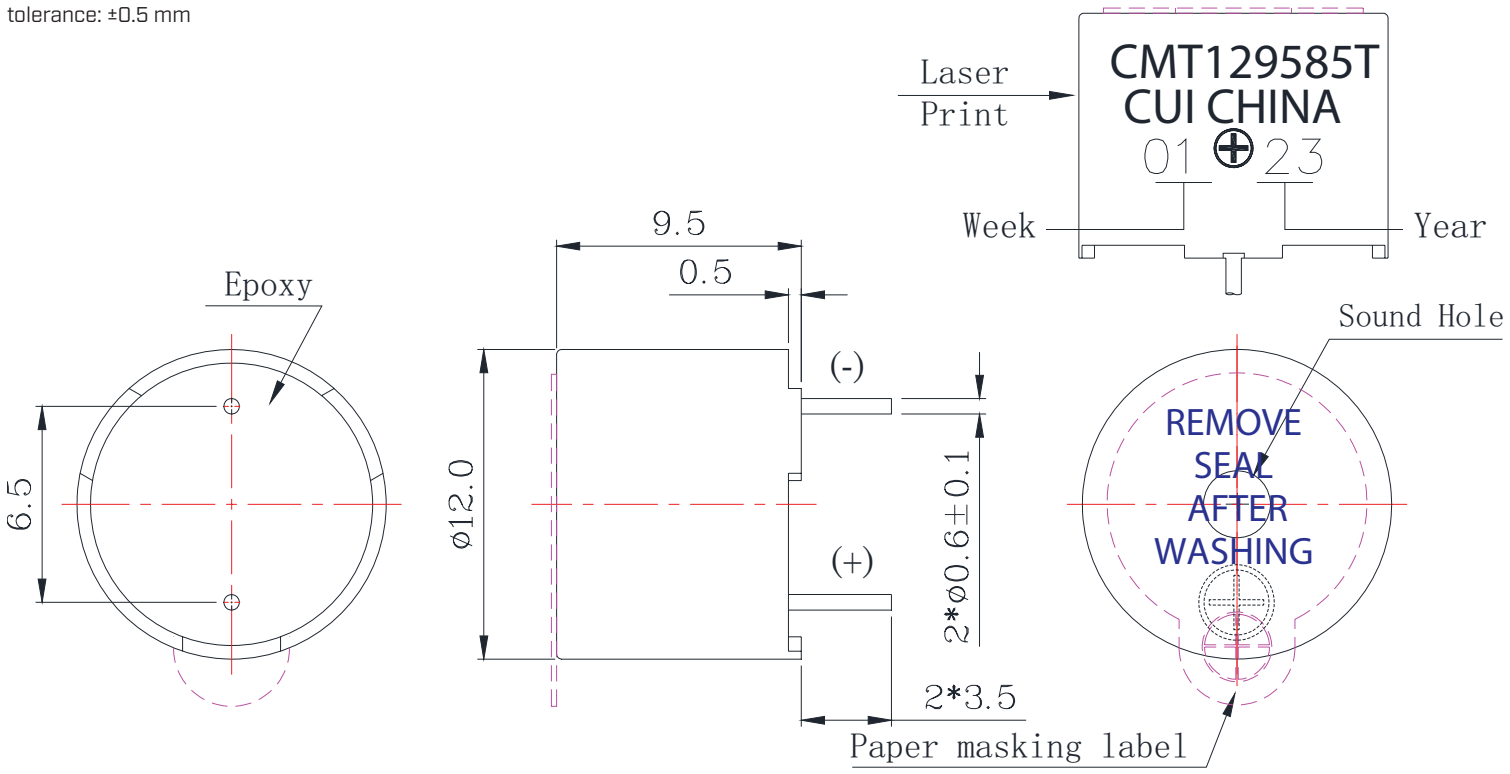

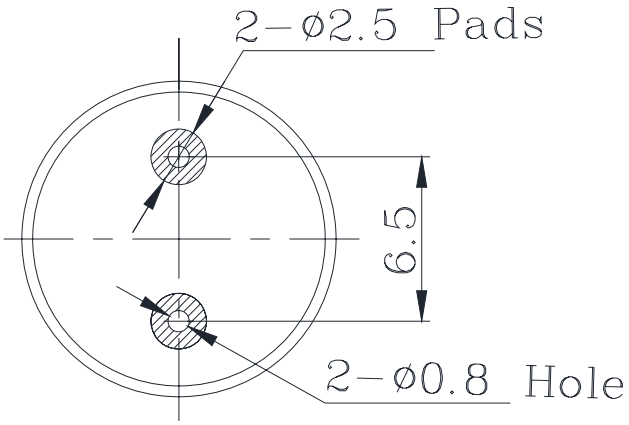

Recommended PCB Layout
Top View

FREQUENCY RESPONSE CURVE

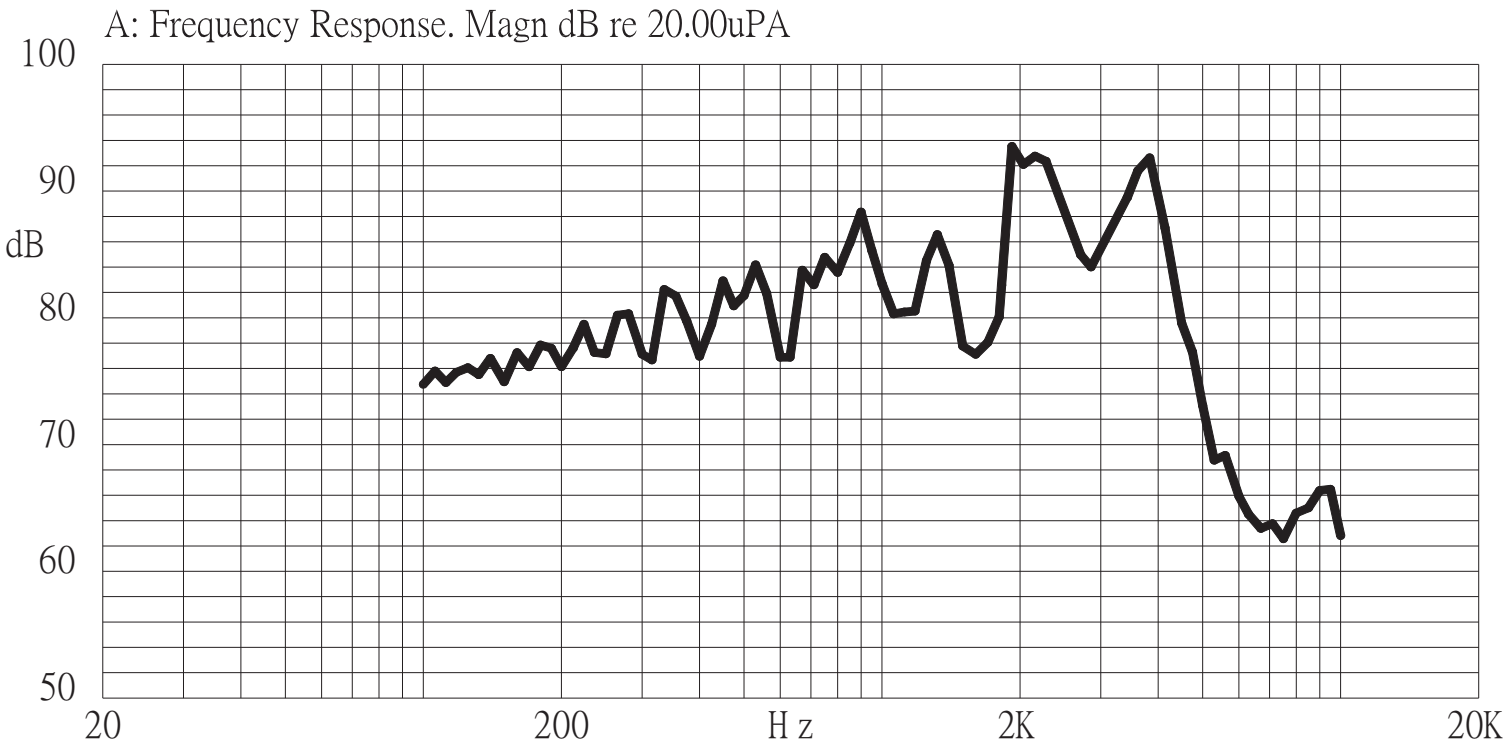

APPLICATION CIRCUIT

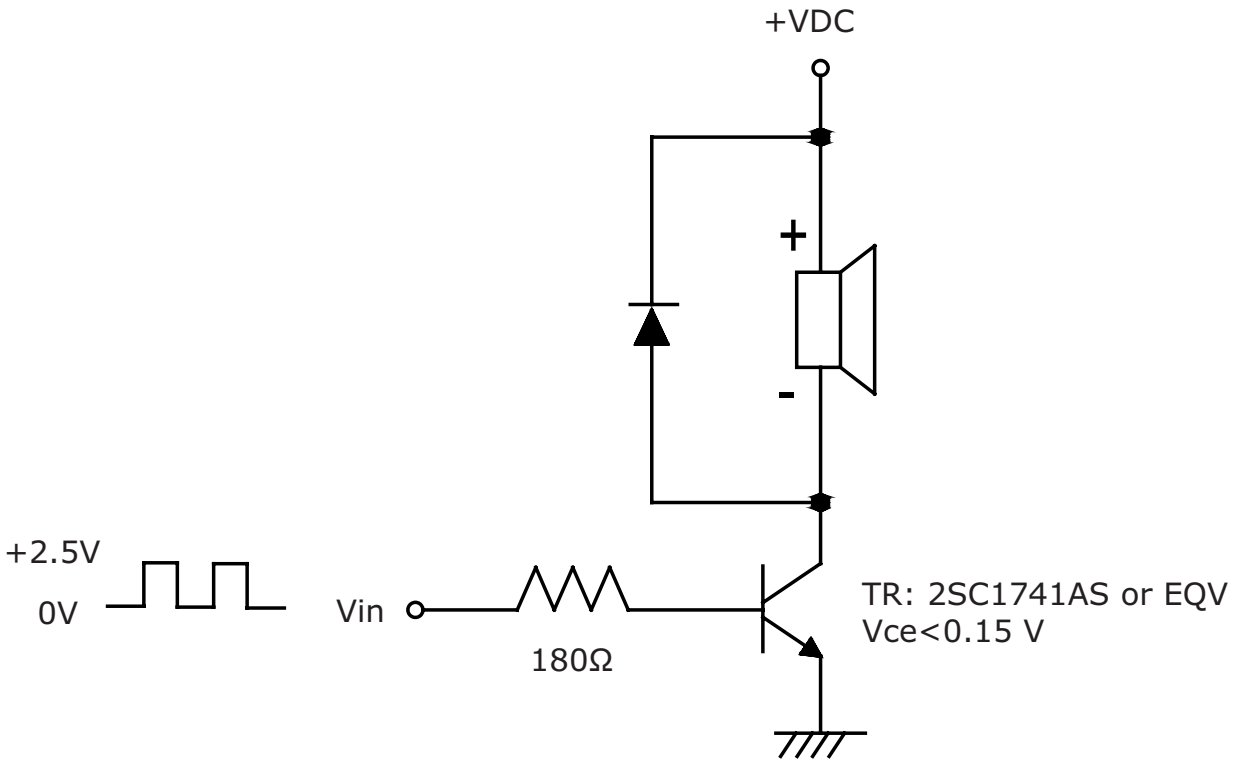

REVISION HISTORY

rev.	description	date
1.0	initial release	12/19/2023

The revision history provided is for informational purposes only and is believed to be accurate.

CUI Devices offers a one (1) year limited warranty. Complete warranty information is listed on our website.

CUI Devices reserves the right to make changes to the product at any time without notice. Information provided by CUI Devices is believed to be accurate and reliable. However, no responsibility is assumed by CUI Devices for its use, nor for any infringements of patents or other rights of third parties which may result from its use.

CUI Devices products are not authorized or warranted for use as critical components in equipment that requires an extremely high level of reliability. A critical component is any component of a life support device or system whose failure to perform can be reasonably expected to cause the failure of the life support device or system, or to affect its safety or effectiveness.

cuidevices.com