MODEL: CMT-2412C-050 | DESCRIPTION: MAGNETIC BUZZER TRANSDUCER

FEATURES

- externally driven
- wave solderable
- washable



RoHS

SPECIFICATIONS

parameter	conditions/description	min	typ	max	units
rated voltage	Vo-p  0V		5		Vo-p
operating voltage		4		6	Vo-p
current consumption	at rated voltage, 800 Hz square wave, ½ duty			80	mA
rated frequency			800		Hz
sound pressure level	at 10 cm (A-weight), rated voltage, 800 Hz square wave, ½ duty	85	89		dBA
coil resistance		26	30	34	Ω
dimensions	Ø24.5 x 12.5				mm
weight			8		g
material	PPO				
terminal	pin type (Sn plating)				
operating temperature		-30		75	°C
storage temperature		-40		85	°C
RoHS	yes				

Notes: 1. All specifications measured at 5~35°C, humidity at 45~85%, under 86~106 kPa pressure, unless otherwise noted.

SOLDERABILITY

parameter	conditions/description	min	typ	max	units
wave soldering	see recommended wave soldering profile			250	°C

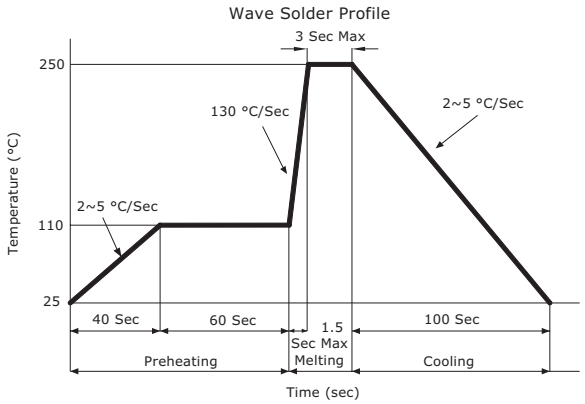

MECHANICAL DRAWING

units: mm
tolerance: ±0.5 mm

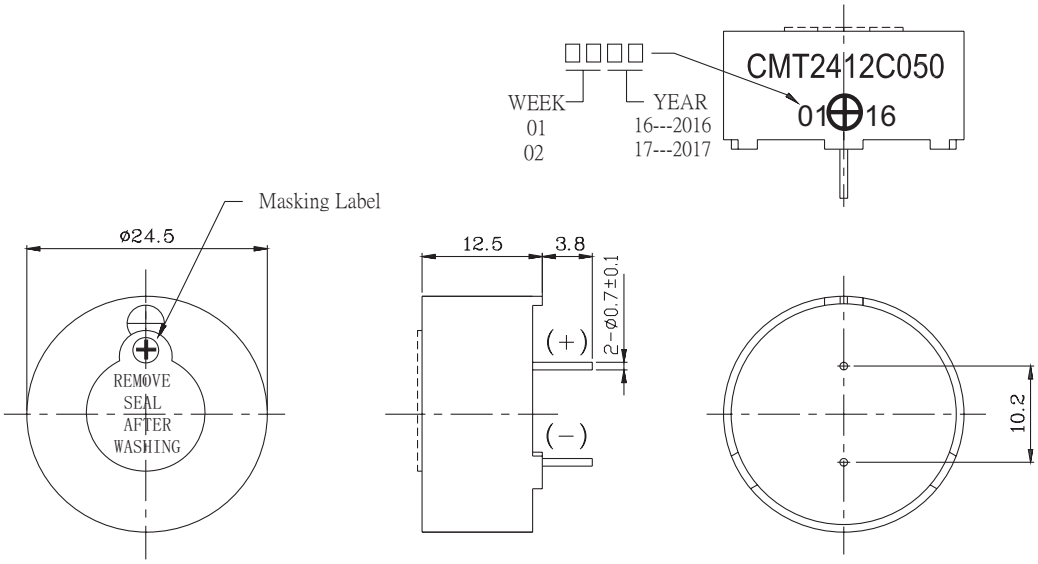

FREQUENCY RESPONSE CURVE

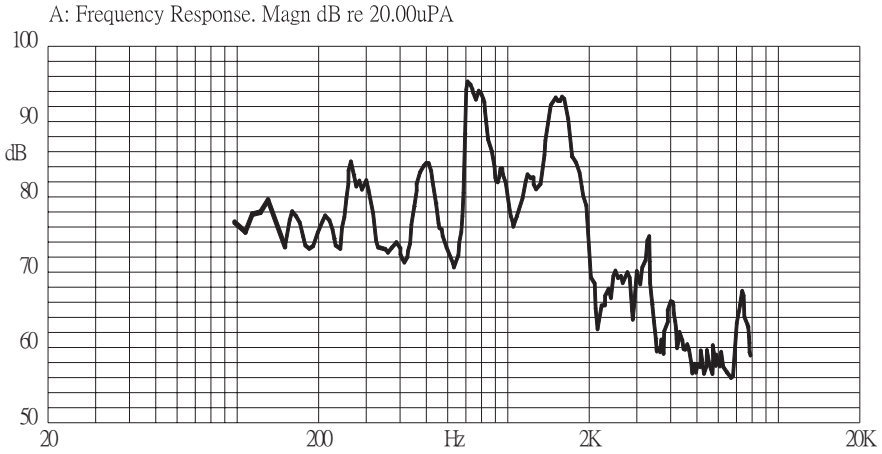

MEASUREMENT METHOD

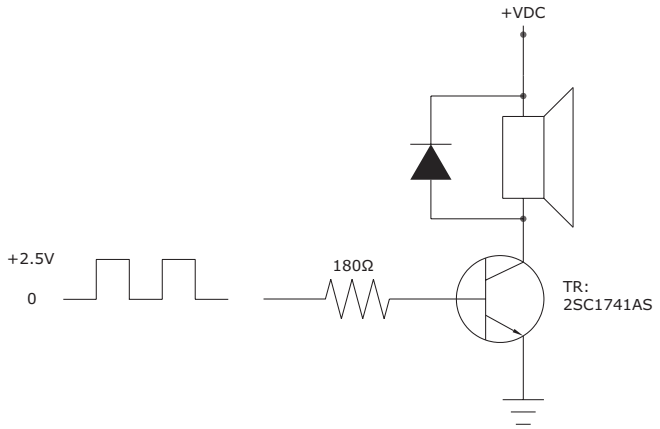

PACKAGING

units: mm

Tray Size: 315 x 170 x 280 mm
Carton Size: 520 x 330 x 280 mm
Tray QTY: 50 pcs per tray
Carton QTY: 1,500 pcs per carton

Lot No.	XXXXXXXXXX
Model No.	XXXXXXXXXX
Quantity.	XXXX Pcs
Date: DD MM YY MADE IN CHINA	G

The label is placed on the inner boxes and outer carton.

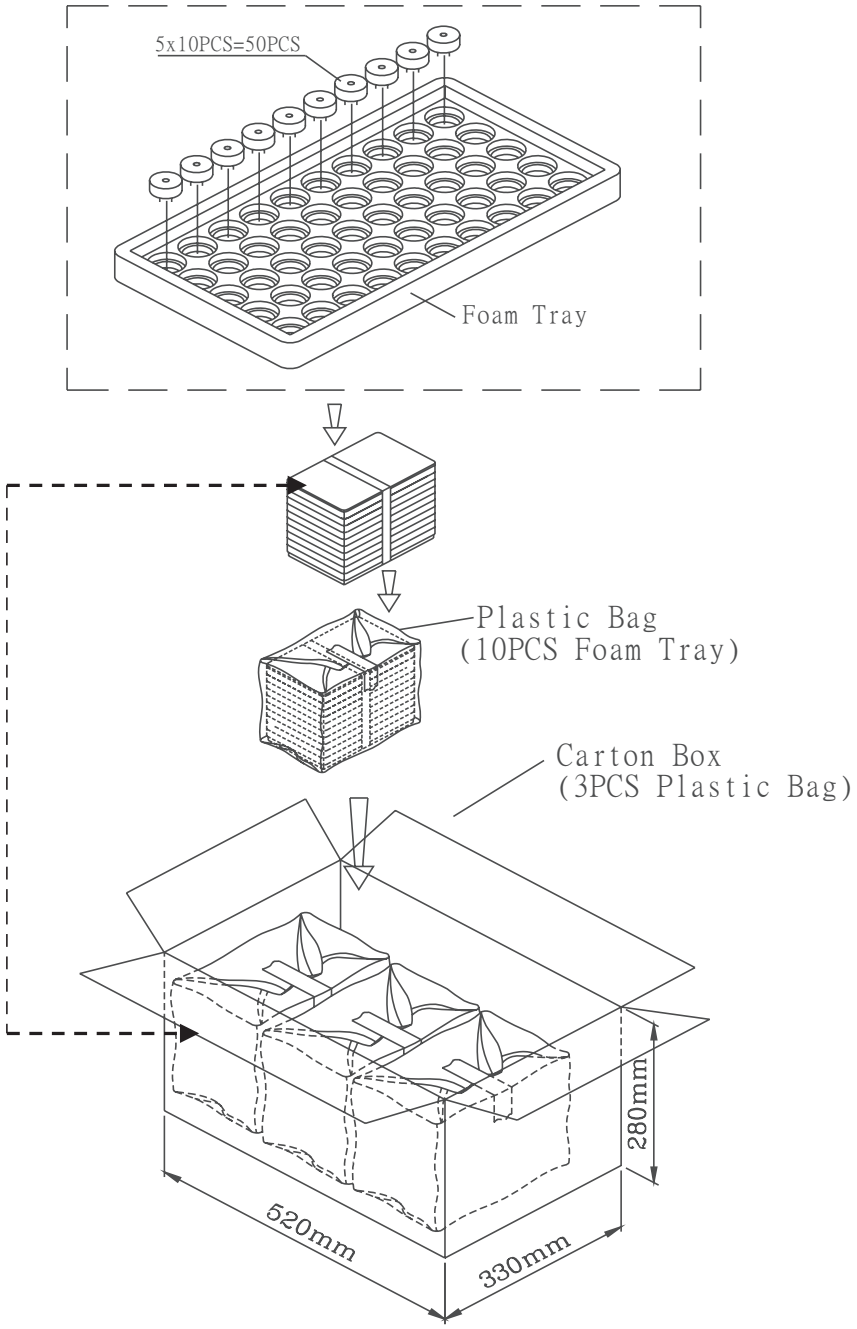

REVISION HISTORY

rev.	description	date
1.0	initial release	03/31/2016
1.01	brand update	12/11/2019
1.02	logo, datasheet style update	08/05/2022

The revision history provided is for informational purposes only and is believed to be accurate.

CUI Devices offers a one (1) year limited warranty. Complete warranty information is listed on our website.

CUI Devices reserves the right to make changes to the product at any time without notice. Information provided by CUI Devices is believed to be accurate and reliable. However, no responsibility is assumed by CUI Devices for its use, nor for any infringements of patents or other rights of third parties which may result from its use.

CUI Devices products are not authorized or warranted for use as critical components in equipment that requires an extremely high level of reliability. A critical component is any component of a life support device or system whose failure to perform can be reasonably expected to cause the failure of the life support device or system, or to affect its safety or effectiveness.

cuidevices.com