# MODEL: CMT-4023S-SMT-TR | DESCRIPTION: MAGNETIC BUZZER TRANSDUCER

## FEATURES

- 4 x 4 x 2 mm
- SMT
- rated frequency of 4000 Hz



RoHS

## SPECIFICATIONS

| parameter | conditions/description | min | typ | max | units |
|---|---|---|---|---|---|
| rated voltage | 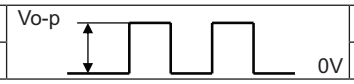  | | 3.0 | | Vo-p |
| operating voltage | | 2.0 | | 4.0 | Vo-p |
| current consumption | at rated voltage, 4,000 Hz square wave, ½ duty | | | 90 | mA |
| rated frequency | | | 4,000 | | Hz |
| sound pressure level | at 10 cm (A-weight), rated voltage, 4,000 Hz square wave, ½ duty | 70 | | | dBA |
| coil resistance | | 14 | 17 | 20 | Ω |
| dimensions | 4.0 x 4.0 x 2.0 | | | | mm |
| weight | | | 0.07 | | g |
| material | LCP | | | | |
| terminal | SMT type (Sn plating) | | | | |
| operating temperature | | -20 | | 70 | °C |
| storage temperature | | -30 | | 80 | °C |
| RoHS | yes | | | | |

Notes: 1. All specifications measured at 5~35°C, humidity at 45~85%, under 86~106 kPa pressure, unless otherwise noted.

## SOLDERABILITY

| parameter | conditions/description | min | typ | max | units |
|---|---|---|---|---|---|
| reel storage | at relative humidity <40% | | | 25 | °C |
| reflow soldering[2] | see recommended reflow soldering profile | | | 260 | °C |
| drying conditions[3] | bake at 40°C for 24 hours | | | | |

Note: 2. It is recommended to reflow solder within 48 hours from opening vacuum packaging at a temperature <30°C & relative humidity <60%.
3. When out of packaging for more than 48 hours.

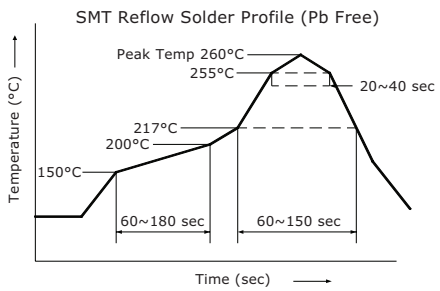

## MECHANICAL DRAWING

units: mm
tolerance: ±0.5 mm

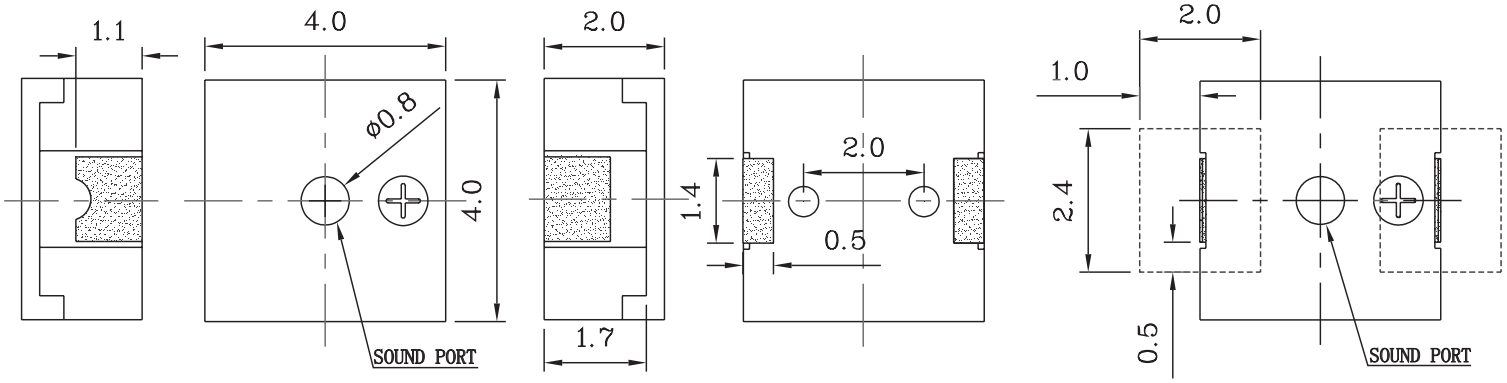


Recommended PCB Layout
Top View

## FREQUENCY RESPONSE CURVE

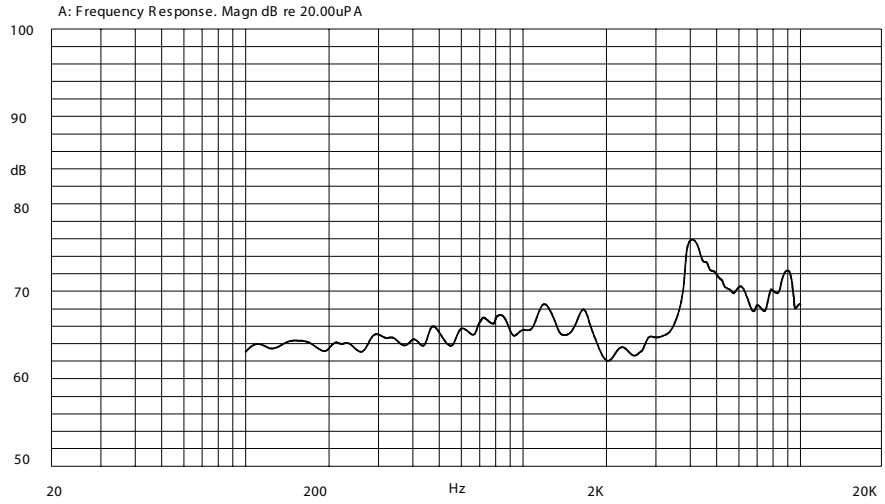


## MEASUREMENT METHOD

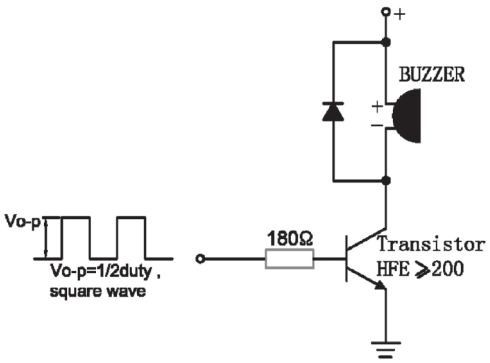

## PACKAGING

units: mm

Reel Size: Ø330 mm
Carton Size: 370 x 350 x 350 mm
Reel QTY: 3,000 pcs per reel
Carton QTY: 30,000 pcs per carton

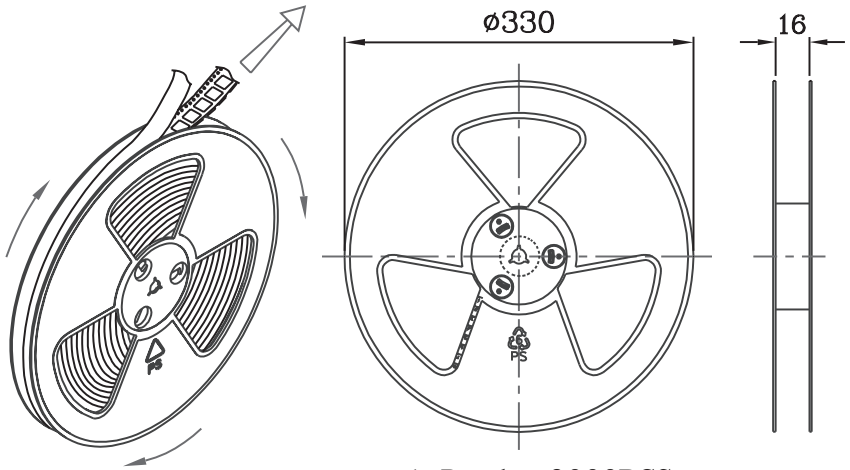


1 Reel: 3000PCS

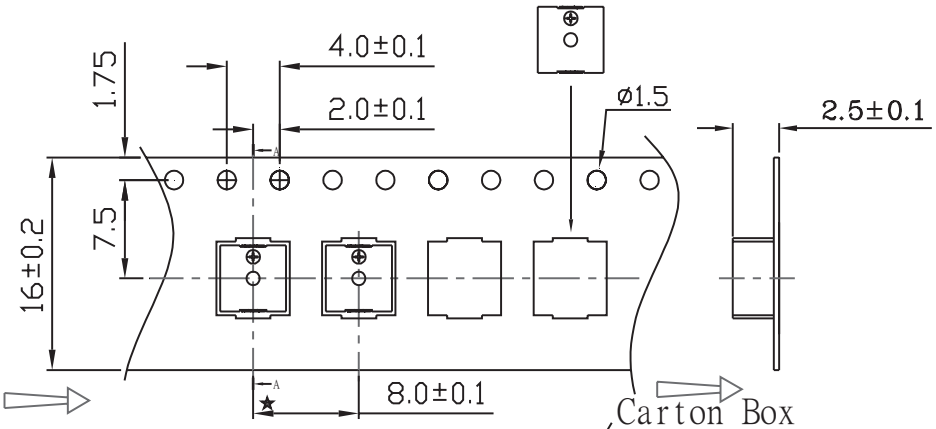


| | |
|---|---|
| Lot No. | XXXXXXXXXX |
| Model No. | XXXXXXXXXX |
| Quantity. | XXXX Pcs |
| Date: DD MM YY<br>MADE IN CHINA | G |

The label is placed on the inner boxes and outer carton.

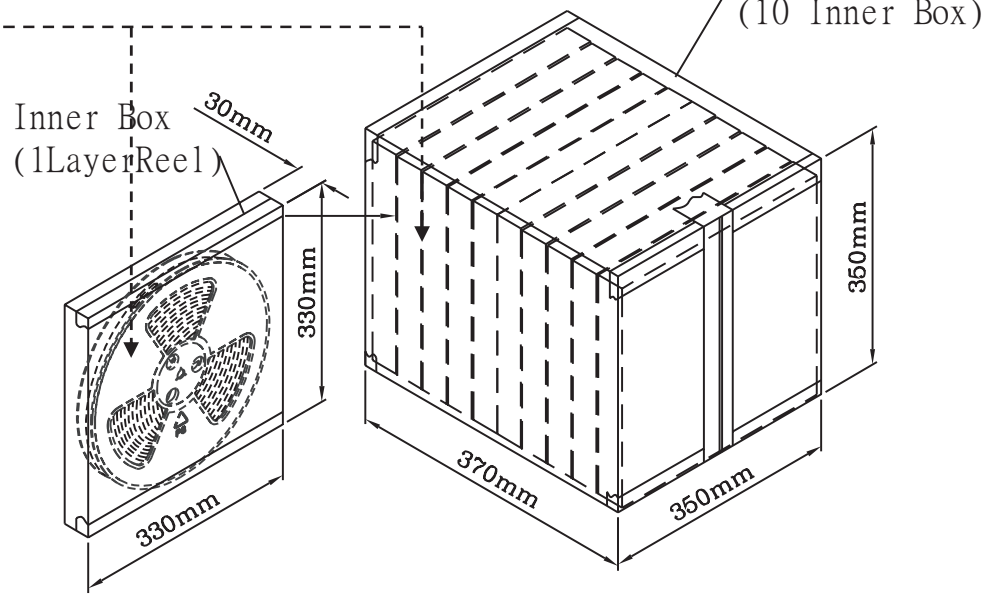

## REVISION HISTORY

| rev. | description | date |
|---|---|---|
| 1.0 | initial release | 03/31/2016 |
| 1.01 | added storage and drying conditions | 07/29/2019 |
| 1.02 | brand update | 11/22/2019 |
| 1.03 | logo, datasheet style update | 08/05/2022 |

The revision history provided is for informational purposes only and is believed to be accurate.

CUI Devices offers a one (1) year limited warranty. Complete warranty information is listed on our website.

CUI Devices reserves the right to make changes to the product at any time without notice. Information provided by CUI Devices is believed to be accurate and reliable. However, no responsibility is assumed by CUI Devices for its use, nor for any infringements of patents or other rights of third parties which may result from its use.

CUI Devices products are not authorized or warranted for use as critical components in equipment that requires an extremely high level of reliability. A critical component is any component of a life support device or system whose failure to perform can be reasonably expected to cause the failure of the life support device or system, or to affect its safety or effectiveness.

**cuidevices.com**