CUDEVICES

MODEL: CPE-163 | **DESCRIPTION:** PIEZO BUZZER TRANSDUCER

FEATURES

- piezo transducer with wire leads
- 80 dB SPL
- 4,800 Hz rated frequency

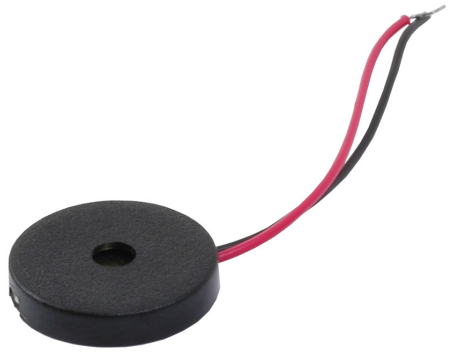

RoHS

SPECIFICATIONS

parameter	conditions/description	min	typ	max	units
operating voltage				30	Vp-p
current consumption	at 10 Vp-p, 4,800 Hz square wave			10	mA
rated frequency			4,800		Hz
sound pressure level	at 10 cm, 10 Vp-p, 4,800 Hz square wave	80			dB
electrostatic capacity	at 1 kHz/1 V	9,800	14,000	18,200	pF
dimensions	Ø13.0 x 2.5				mm
weight				0.35	g
material	ABS UL94 1/16" HB High Heat (black)				
terminal	wire leads				
operating temperature		-30		85	°C
storage temperature		-40		95	°C
RoHS	yes				

Notes: 1. All specifications measured at 5~35°C, humidity at 45~85%, under 86~106kPa pressure, unless otherwise noted.

SOLDERABILITY

parameter	conditions/description	min	typ	max	units
hand soldering	for 2 ± 0.5 seconds	280	290	300	°C

MECHANICAL DRAWING

units: mm
tolerance: ±0.5 mm

wire: UL1571 32 AWG

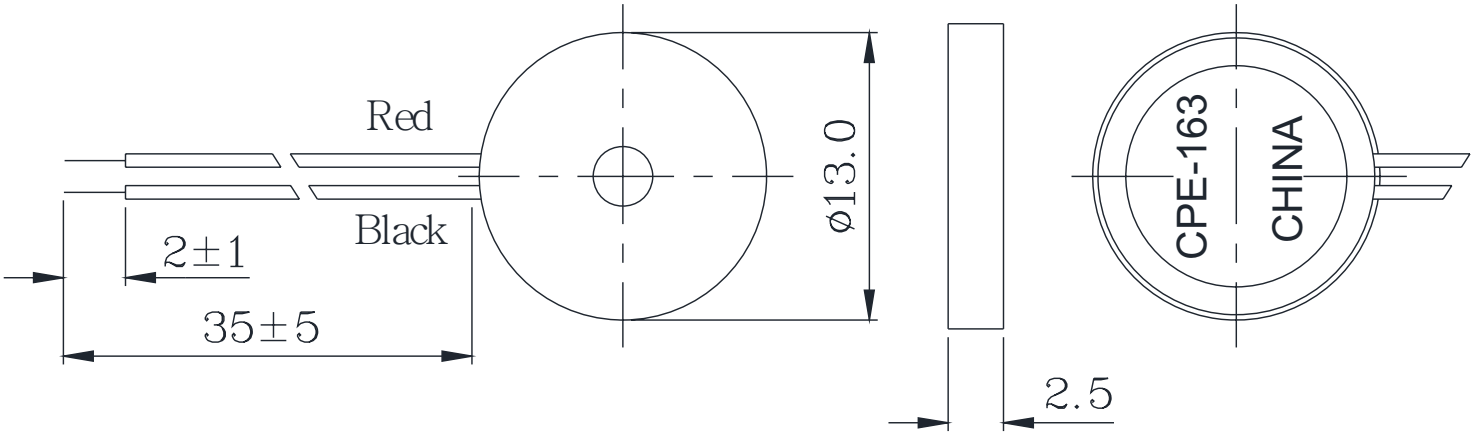

FREQUENCY RESPONSE CURVE

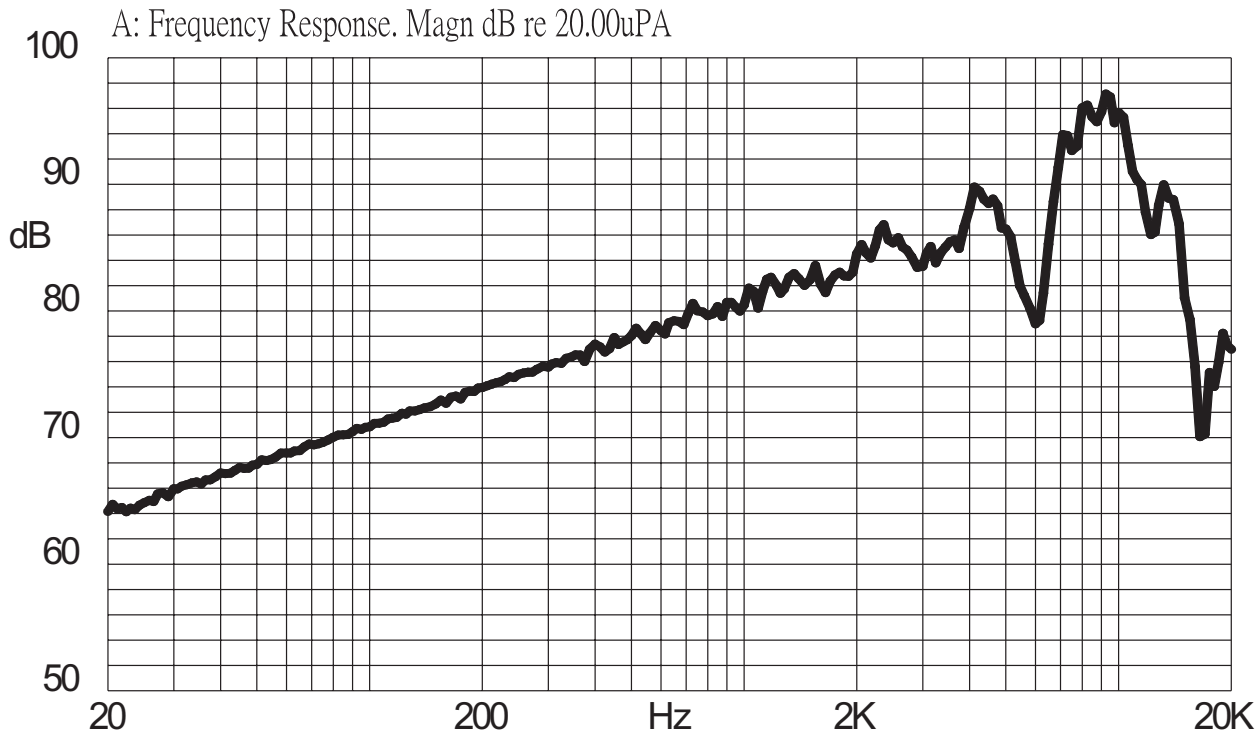

REVISION HISTORY

rev.	description	date
1.0	initial release	11/12/2007
1.01	brand update	05/05/2020
1.02	logo, datasheet style update	08/05/2022

The revision history provided is for informational purposes only and is believed to be accurate.

CUI Devices offers a one (1) year limited warranty. Complete warranty information is listed on our website.

CUI Devices reserves the right to make changes to the product at any time without notice. Information provided by CUI Devices is believed to be accurate and reliable. However, no responsibility is assumed by CUI Devices for its use, nor for any infringements of patents or other rights of third parties which may result from its use.

CUI Devices products are not authorized or warranted for use as critical components in equipment that requires an extremely high level of reliability. A critical component is any component of a life support device or system whose failure to perform can be reasonably expected to cause the failure of the life support device or system, or to affect its safety or effectiveness.

cuidevices.com