CUDEVICES

MODEL: CPI-137-12T | **DESCRIPTION:** PIEZO BUZZER INDICATOR

FEATURES

- washable
- internally driven
- through hole



RoHS

SPECIFICATIONS

parameter	conditions/description	min	typ	max	units
rated voltage			12		Vdc
operating voltage		5		15	Vdc
current consumption	at rated voltage			18	mA
rated frequency		3,800		4,800	Hz
sound pressure level	at 10 cm, rated voltage	92			dB
tone	continuous				
dimensions	Ø13.9 x 7.5				mm
weight				1.0	g
material	PBT				
terminal	pins (gold plating)				
operating temperature		-40		85	°C
storage temperature		-40		90	°C
washable	yes				
RoHS	yes				

Notes: 1. All specifications measured at 5~35°C, humidity at 45~85%, under 86~106 kPa pressure, unless otherwise noted.

SOLDERABILITY

parameter	conditions/description	min	typ	max	units
hand soldering	maximum 2 seconds	330		380	°C
wave soldering	see recommended wave soldering profile			250	°C

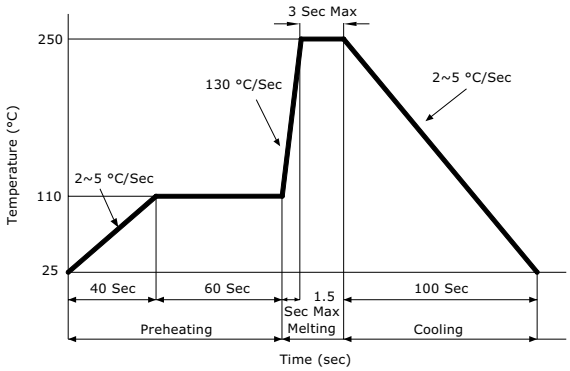

MECHANICAL DRAWING

units: mm
tolerance: ±0.5 mm

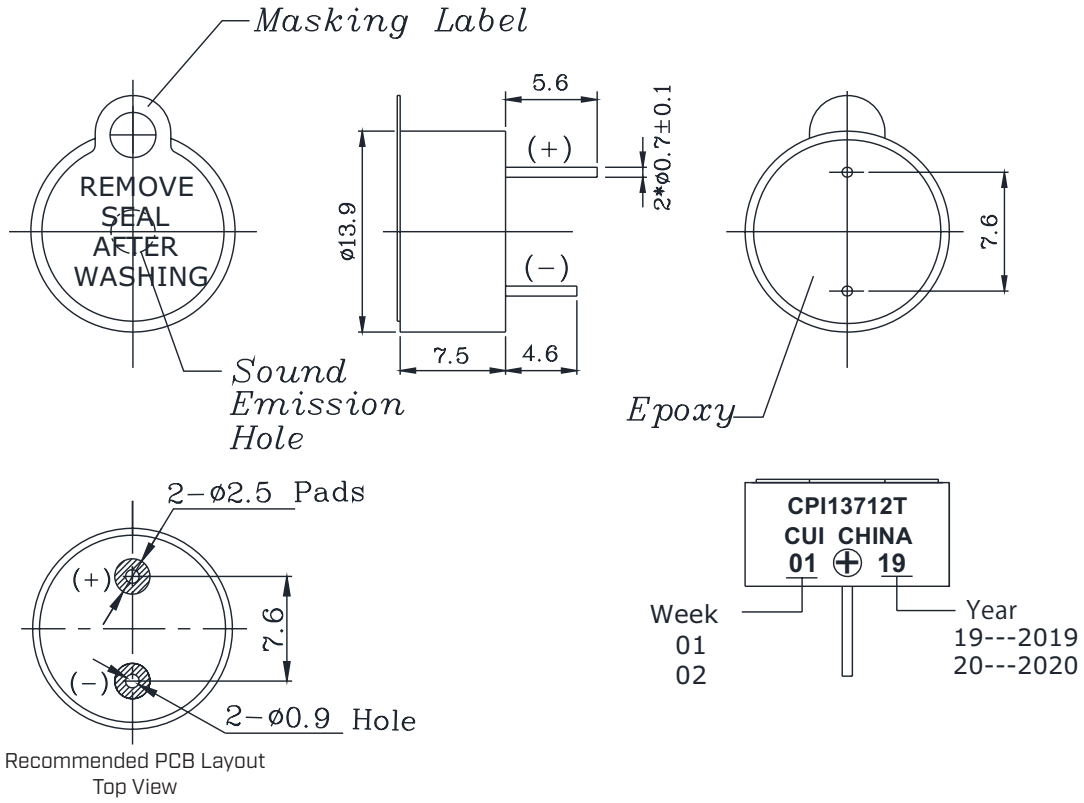

PERFORMANCE CURVES

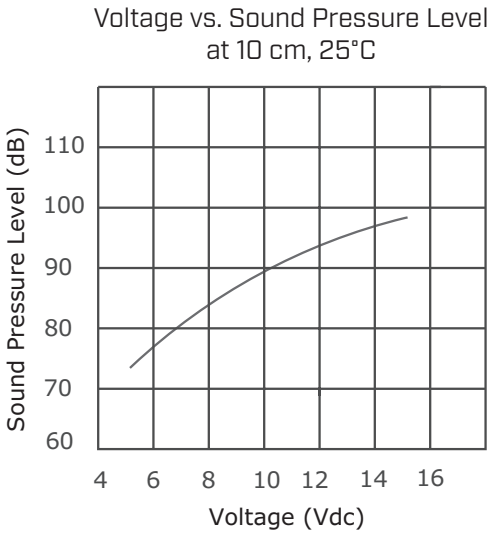

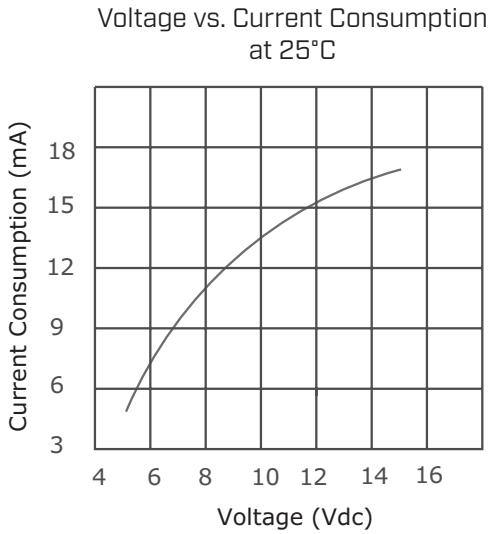

PACKAGING

units: mm

Inner Egg Tray Size: 184 x 180 x 23 mm
Carton Size: 440 x 400 x 310 mm
Carton QTY: 6,000 pcs per carton

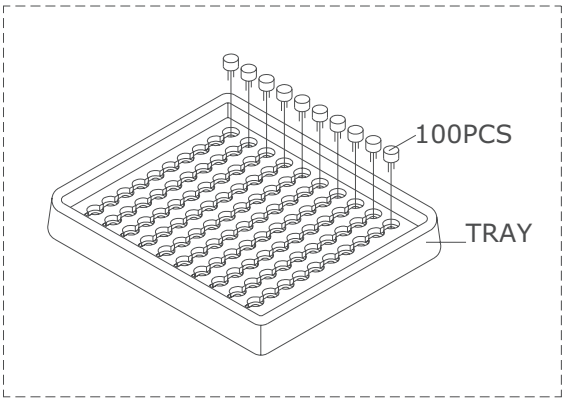

Lot No.	XXXXXXXXXX
Part No.	XXXXXXXXXX XXXXXXXXXX
Quantity	XXXX Pcs
Date: DD MM YY	RoHs Compliant
MADE IN CHINA	

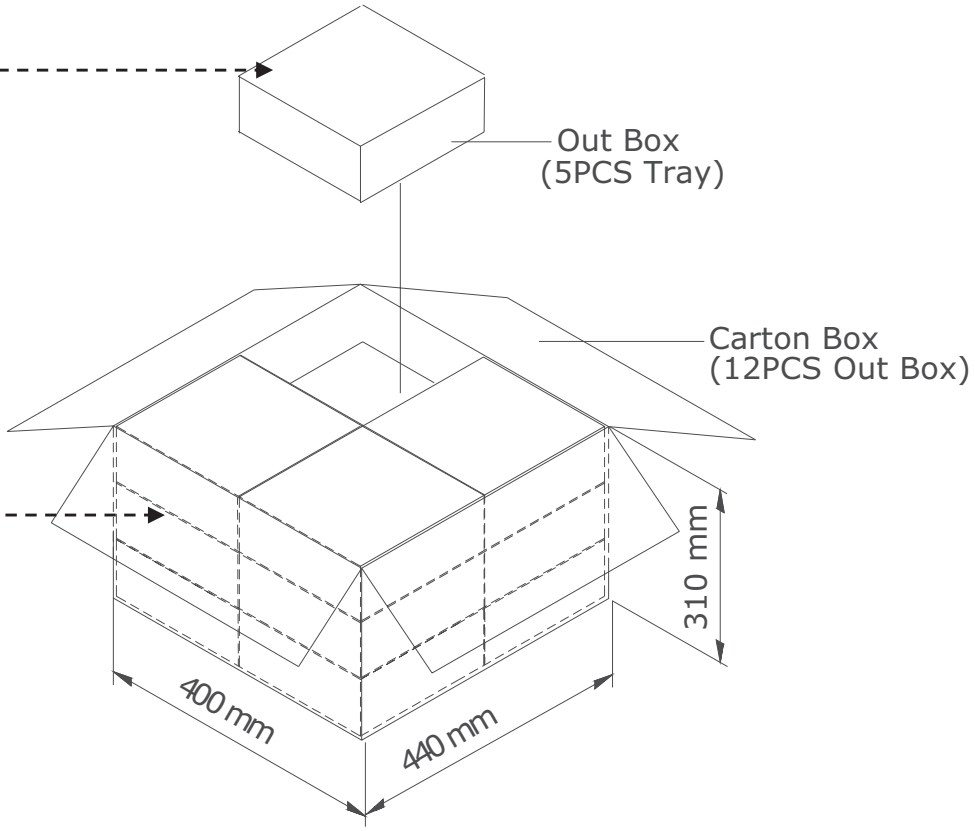

REVISION HISTORY

rev.	description	date
1.0	initial release	12/10/2019
1.01	logo, datasheet style update	08/05/2022

The revision history provided is for informational purposes only and is believed to be accurate.

CUI Devices offers a one (1) year limited warranty. Complete warranty information is listed on our website.

CUI Devices reserves the right to make changes to the product at any time without notice. Information provided by CUI Devices is believed to be accurate and reliable. However, no responsibility is assumed by CUI Devices for its use, nor for any infringements of patents or other rights of third parties which may result from its use.

CUI Devices products are not authorized or warranted for use as critical components in equipment that requires an extremely high level of reliability. A critical component is any component of a life support device or system whose failure to perform can be reasonably expected to cause the failure of the life support device or system, or to affect its safety or effectiveness.

cuidevices.com