CUDEVICES

MODEL: CPI-1375IC-80T | **DESCRIPTION:** PIEZO BUZZER INDICATOR

FEATURES

- 12 Vdc rated
- 88 dB
- through hole
- piezo
- internally driven
- narrow frequency range
- used in medical & security applications



RoHS

SPECIFICATIONS

parameter	conditions/description	min	typ	max	units
rated voltage			12		Vdc
operating voltage		3.5		16	Vdc
current consumption	at rated voltage			7	mA
rated frequency	at rated voltage	3,900	4,000	4,100	Hz
sound pressure level	at 10 cm, rated voltage	88			dB
tone	single				
dimensions	Ø13.8 x 7.5				mm
weight			1.0		g
material	MPPO				
terminal	pins (red coppper with tin plating)				
operating temperature		-30		70	°C
storage temperature		-40		85	°C
washable	yes				
RoHS	yes				

Notes: 1. All specifications measured at 25±3°C, humidity at 60~70%, under 86~106 kPa pressure, unless otherwise noted.

SOLDERABILITY

parameter	conditions/description	min	typ	max	units
wave soldering	see recommended wave soldering profile			250	°C

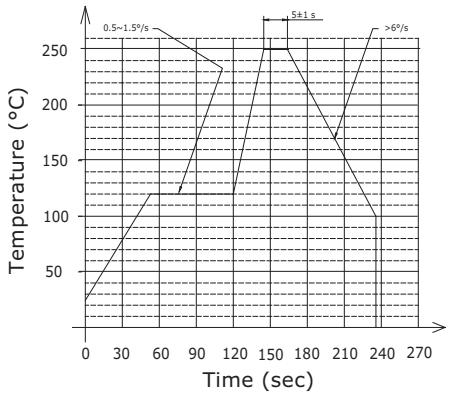

MECHANICAL DRAWING

units: mm
tolerance: ±0.5 mm

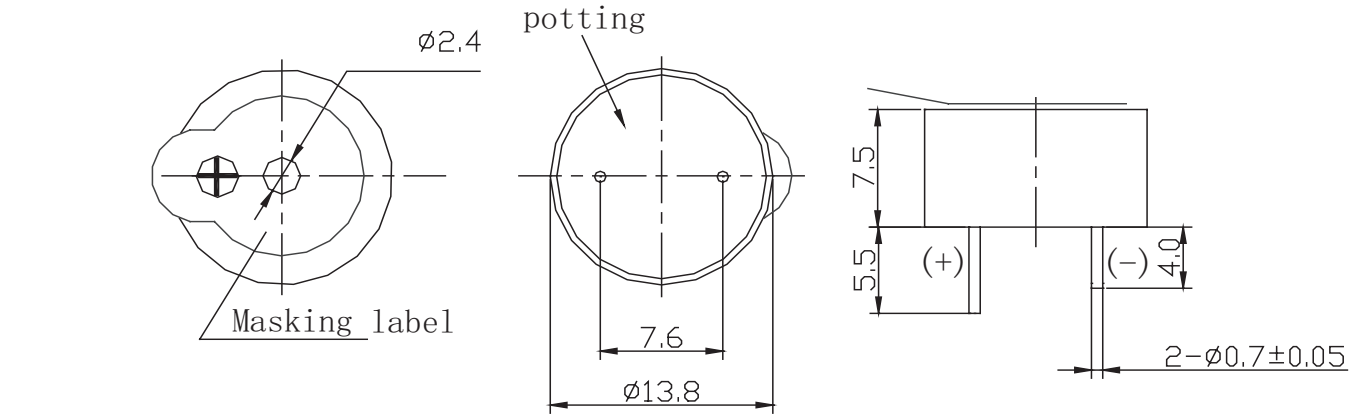

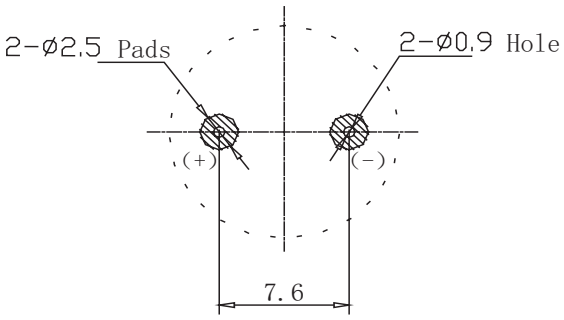

Recommended PCB Layout
Top View

PERFORMANCE CURVES

SPL: Voltage vs. Sound Pressure Level
I: Voltage vs. Current Consumption

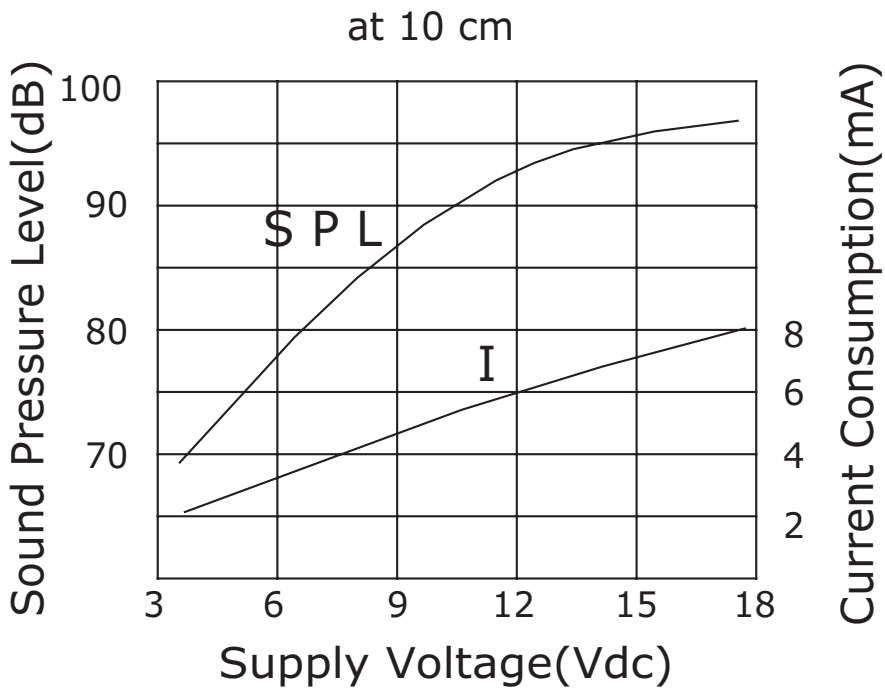

PACKAGING

units: mm

Carton Size: 505 x 420 x 280 mm
Carton QTY: 5,000 pcs per carton

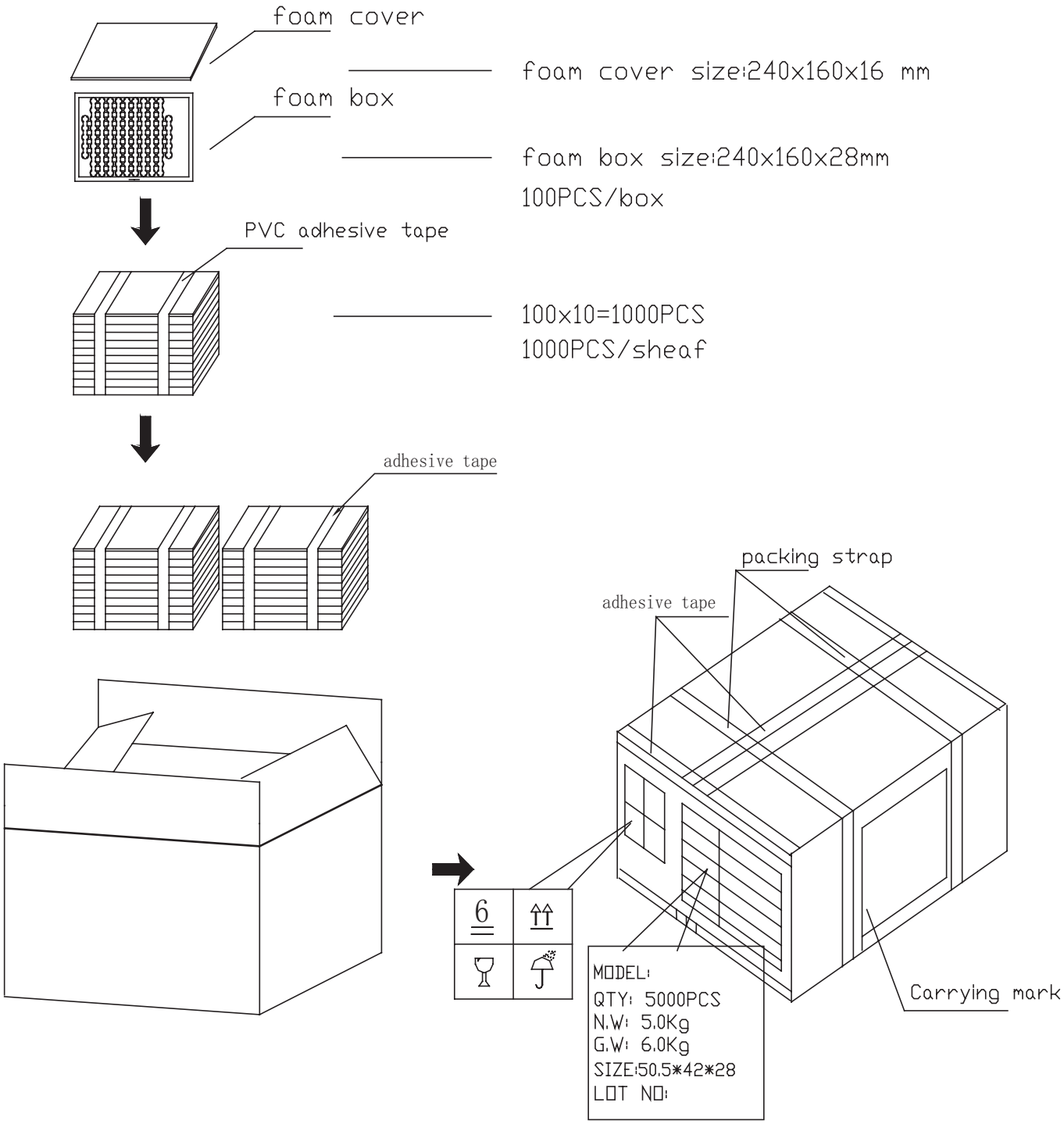

REVISION HISTORY

rev.	description	date
1.0	initial release	11/13/2019
1.01	logo, datasheet style update	08/05/2022

The revision history provided is for informational purposes only and is believed to be accurate.

CUI Devices offers a one (1) year limited warranty. Complete warranty information is listed on our website.

CUI Devices reserves the right to make changes to the product at any time without notice. Information provided by CUI Devices is believed to be accurate and reliable. However, no responsibility is assumed by CUI Devices for its use, nor for any infringements of patents or other rights of third parties which may result from its use.

CUI Devices products are not authorized or warranted for use as critical components in equipment that requires an extremely high level of reliability. A critical component is any component of a life support device or system whose failure to perform can be reasonably expected to cause the failure of the life support device or system, or to affect its safety or effectiveness.

cuidevices.com