CUDEVICES

MODEL: CPI-1762-90-SMT-TR | **DESCRIPTION:** PIEZO BUZZER INDICATOR

FEATURES

- internally driven
- continuous tone
- surface mount



RoHS

SPECIFICATIONS

parameter	conditions/description	min	typ	max	units
rated voltage			12		Vdc
operating voltage		3		15	Vdc
current consumption	at rated voltage			12	mA
rated frequency		3,500	4,000	4,500	Hz
sound pressure level	at 10 cm, rated voltage	90			dB
tone	continuous				
dimensions	Ø17 x 6.2				mm
weight				2.3	g
material	PPS				
terminal	surface mount (tin plating)				
operating temperature		-40		85	°C
storage temperature		-40		90	°C
washable	no				
RoHS	yes				

Notes: 1. All specifications measured at 5~35°C, humidity at 45~85%, under 86~106 kPa pressure, unless otherwise noted.

MECHANICAL DRAWING

units: mm
tolerance: ±0.5 mm

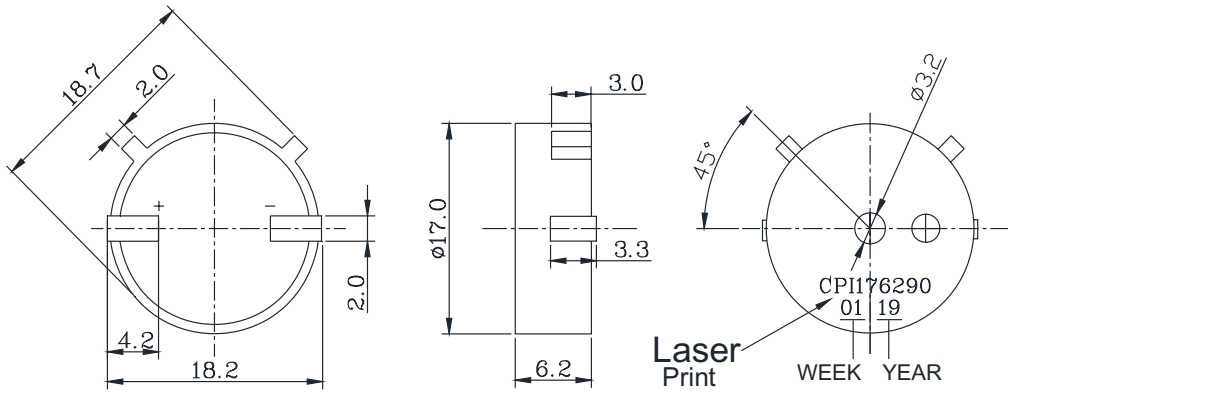

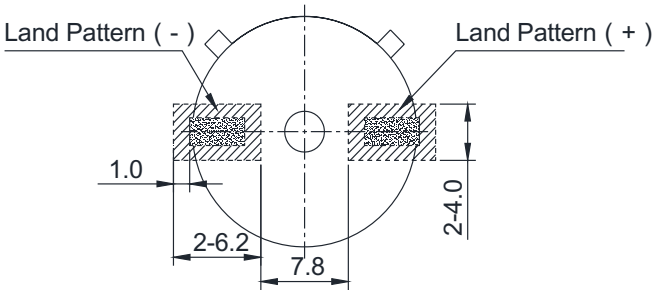

Recommended PCB Layout
Top View

PERFORMANCE CURVES

SPL: Voltage vs. Sound Pressure Level
I: Voltage vs. Current Consumption
at 10 cm

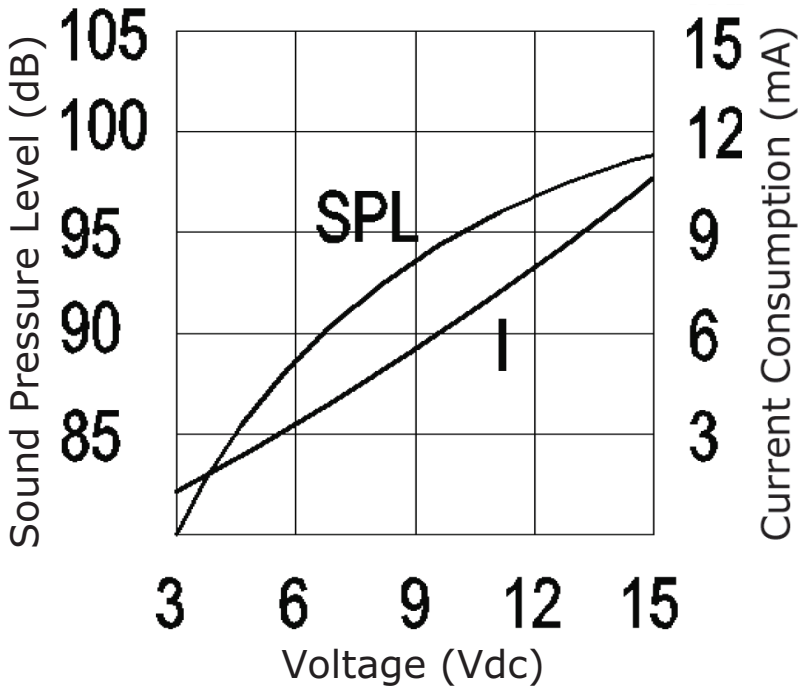

SOLDERABILITY

parameter	conditions/description	min	typ	max	units
reflow soldering[4]	as per IPC/JEDEC J-STD-020C		240	245	°C
drying conditions[5]	bake at 40°C for 24 hours				

Note:
2. Not suitable for wash process.
3. It is recommended to reflow solder only once.
4. It is recommended to reflow solder within 48 hours from opening vacuum packaging at a temperature <30°C & relative humidity <60%.
5. When out of packaging for more than 48 hours.

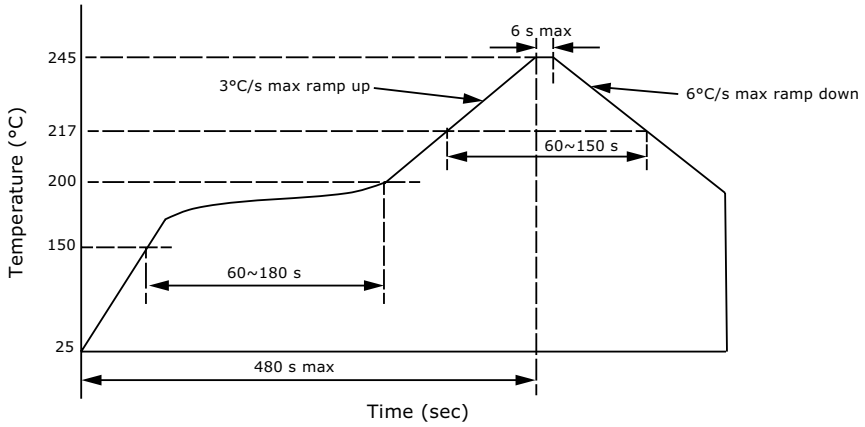

PACKAGING

parameter	conditions/description	min	typ	max	units
reel storage[6]	at relative humidity 15~85%	-10		40	°C
reel QTY	400				
carton QTY	4,000				

Note:
6. Recommended storage period no more than 6 months. Floor life (out of bag) use immediately.

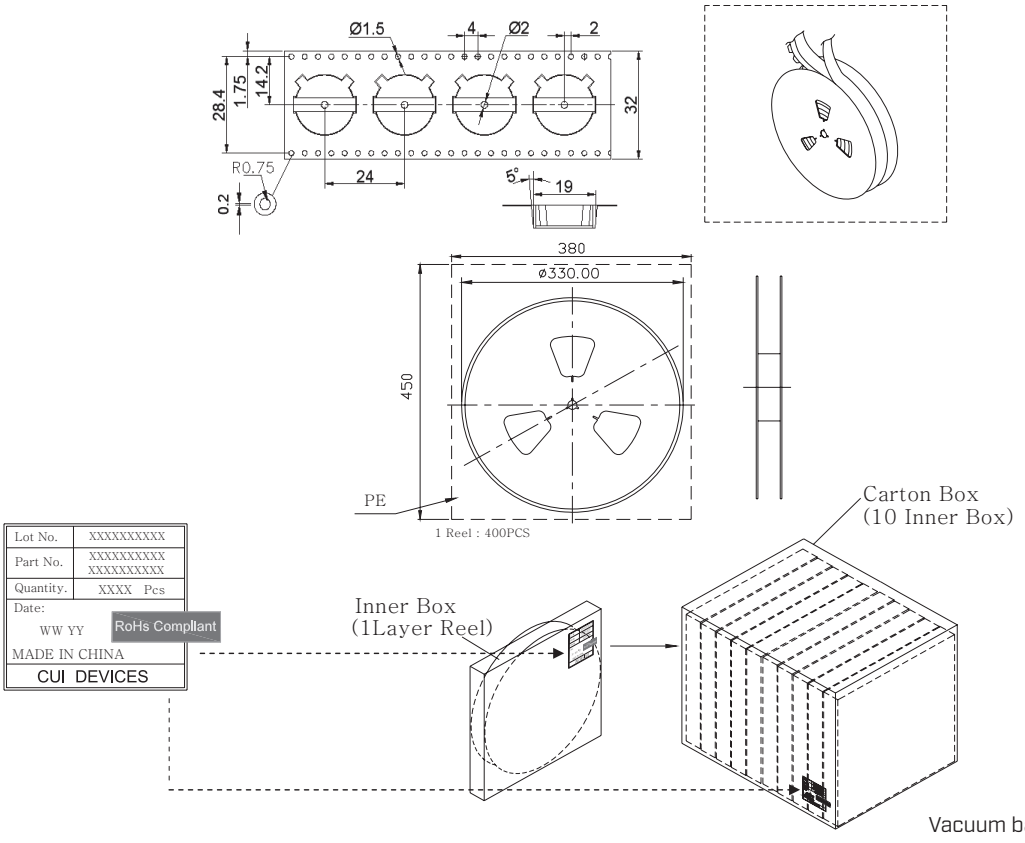

REVISION HISTORY

rev.	description	date
1.0	initial release	12/12/2019
1.01	updated packaging	01/08/2020
1.02	updated packaging	10/06/2020
1.03	logo, datasheet style update	08/05/2022

The revision history provided is for informational purposes only and is believed to be accurate.

CUI Devices offers a one (1) year limited warranty. Complete warranty information is listed on our website.

CUI Devices reserves the right to make changes to the product at any time without notice. Information provided by CUI Devices is believed to be accurate and reliable. However, no responsibility is assumed by CUI Devices for its use, nor for any infringements of patents or other rights of third parties which may result from its use.

CUI Devices products are not authorized or warranted for use as critical components in equipment that requires an extremely high level of reliability. A critical component is any component of a life support device or system whose failure to perform can be reasonably expected to cause the failure of the life support device or system, or to affect its safety or effectiveness.

cuidevices.com