CUDEVICES

MODEL: CPI-4116-85PM | **DESCRIPTION:** PIEZO BUZZER INDICATOR

FEATURES

- 85 dB
- piezo
- internally driven
- panel mount with 140 mm lead wires



RoHS

SPECIFICATIONS

parameter	conditions/description	min	typ	max	units
rated voltage			12		Vdc
operating voltage		3		20	Vdc
current consumption	at rated voltage			10	mA
rated frequency	at rated voltage	2,300	2,800	3,300	Hz
sound pressure level	at 30 cm, rated voltage	85			dB
tone	single				
dimensions	Ø41.8 x 16				mm
weight			15.0		g
material	ABS				
terminal	wire leads				
operating temperature		-20		60	°C
storage temperature		-30		70	°C
RoHS	yes				

Notes: 1. All specifications measured at 25±3°C, humidity at 60~70%, under 86~106 kPa pressure, unless otherwise noted.

SOLDERABILITY

parameter	conditions/description	min	typ	max	units
hand soldering		370	380	390	°C

MECHANICAL DRAWING

units: mm
tolerance: ±0.5 mm

wire: UL1007 28 AWG

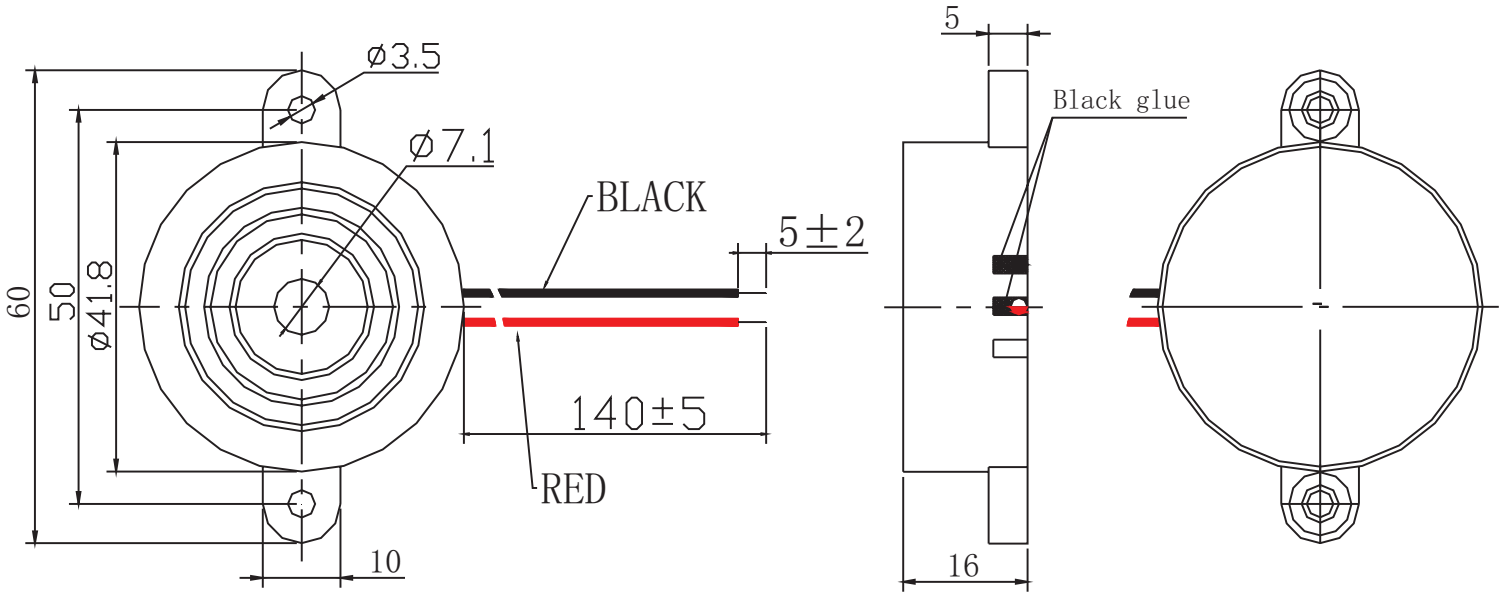

PERFORMANCE CURVES

SPL: Voltage vs. Sound Pressure Level
I: Voltage vs. Current Consumption

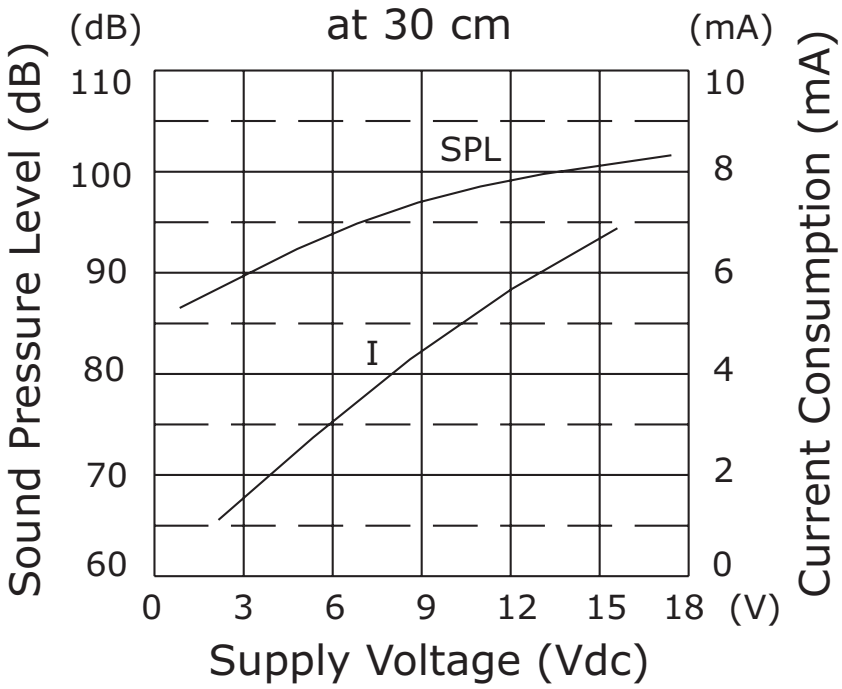

PACKAGING

units: mm

Carton Size: 490 x 310 x 340 mm
Carton QTY: 900 pcs per carton

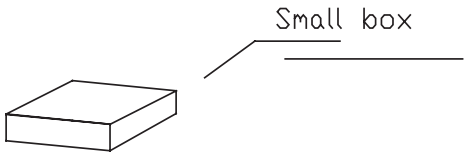

90PCS use one small box.
Small box size:295x235x60mm

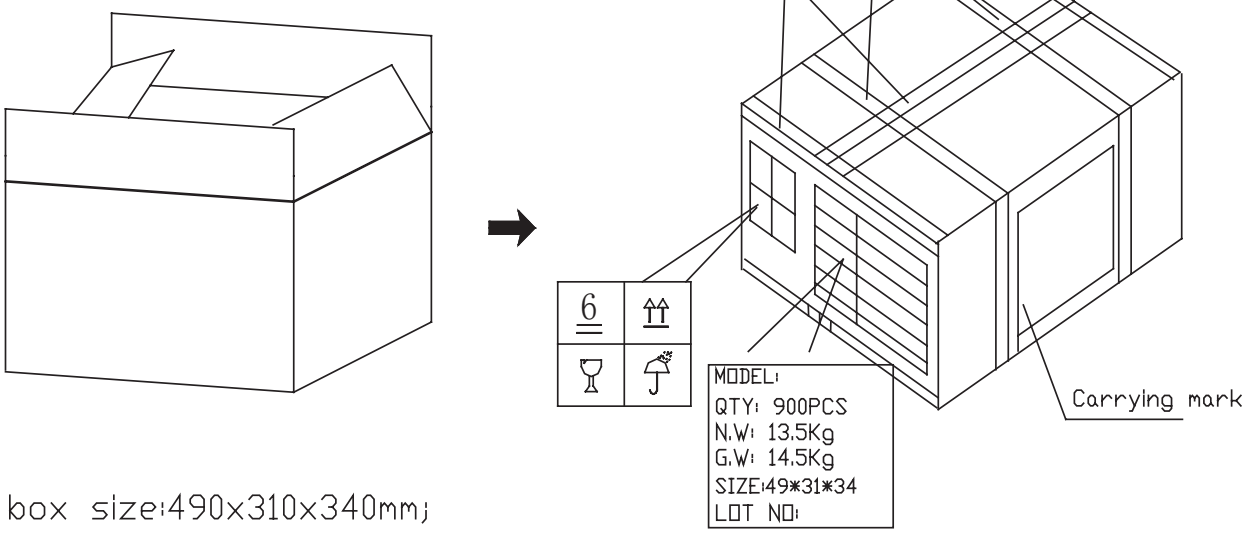

box size:490x310x340mm;
90x10=900pcs/box

REVISION HISTORY

rev.	description	date
1.0	initial release	07/19/2019
1.01	brand update	01/02/2020
1.02	logo, datasheet style update	08/05/2022

The revision history provided is for informational purposes only and is believed to be accurate.

CUI Devices offers a one (1) year limited warranty. Complete warranty information is listed on our website.

CUI Devices reserves the right to make changes to the product at any time without notice. Information provided by CUI Devices is believed to be accurate and reliable. However, no responsibility is assumed by CUI Devices for its use, nor for any infringements of patents or other rights of third parties which may result from its use.

CUI Devices products are not authorized or warranted for use as critical components in equipment that requires an extremely high level of reliability. A critical component is any component of a life support device or system whose failure to perform can be reasonably expected to cause the failure of the life support device or system, or to affect its safety or effectiveness.

cuidevices.com