CUDEVICES

MODEL: CPI-4233-92T | **DESCRIPTION:** PIEZO BUZZER INDICATOR

FEATURES

- fast pulse option
- continuous tone option
- through hole



RoHS

SPECIFICATIONS

parameter	conditions/description	min	typ	max	units
rated voltage			12		Vdc
operating voltage		6		28	Vdc
current consumption	at rated voltage continuous tone fast pulse tone			 13 11	 mA mA
rated frequency		2,300	2,800	3,300	Hz
sound pressure level	at 30 cm, rated voltage continuous tone fast pulse tone	 92 87			 dB dB
tone	continuous fast pulse at rated voltage (3.0 ±20% Hz)				
dimensions	Ø42.5 x 33.0				mm
weight				35	g
material	ABS (UL94 1/16" HB)				
terminal	pins (tin plating)				
operating temperature		-30		85	°C
storage temperature		-40		95	°C
washable	no				
RoHS	yes				

Notes: 1. All specifications measured at 5~35°C, humidity at 45~85%, under 86~106 kPa pressure, unless otherwise noted.

SOLDERABILITY

parameter	conditions/description	min	typ	max	units
hand soldering	maximum 3 seconds	330	350	370	°C

MECHANICAL DRAWING

units: mm
tolerance: ±0.5 mm

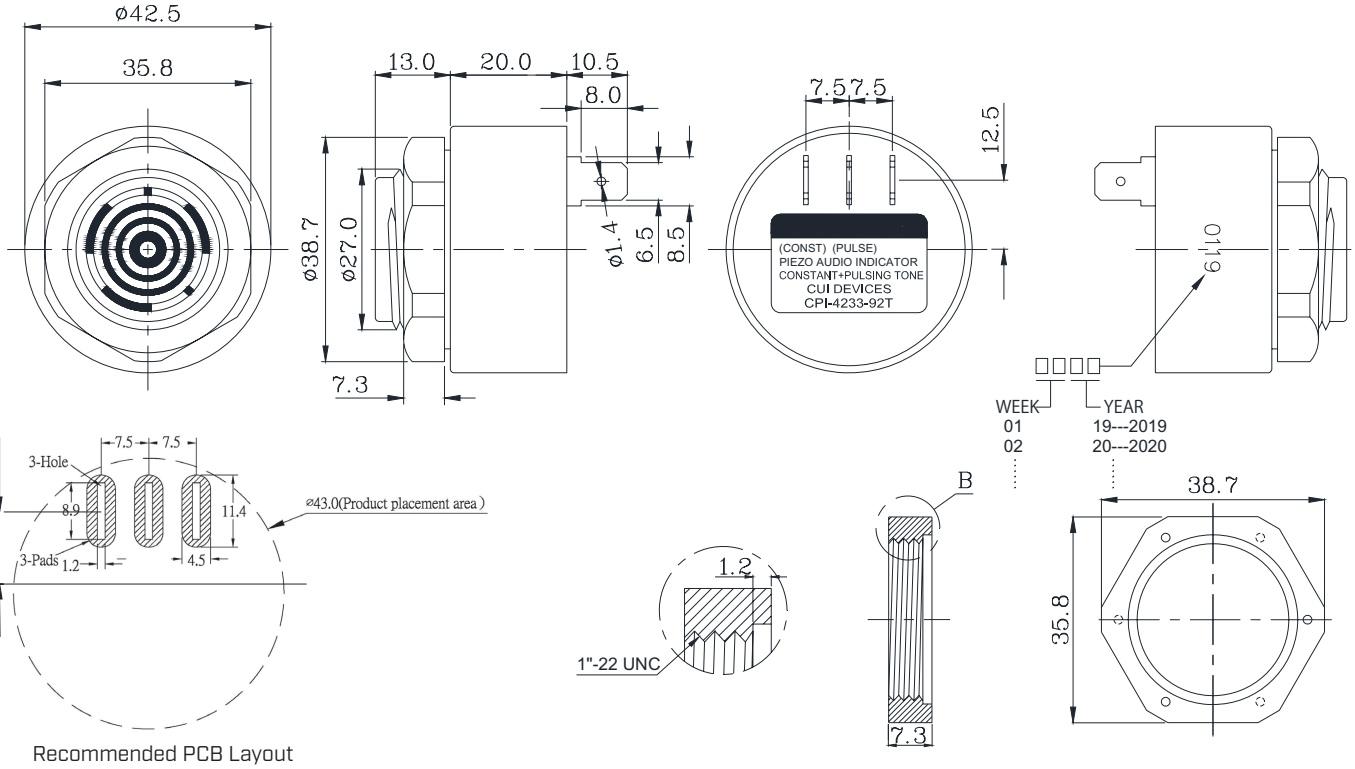

Recommended PCB Layout
Top View

PERFORMANCE CURVES

Voltage vs. Sound Pressure Level
at 30 cm

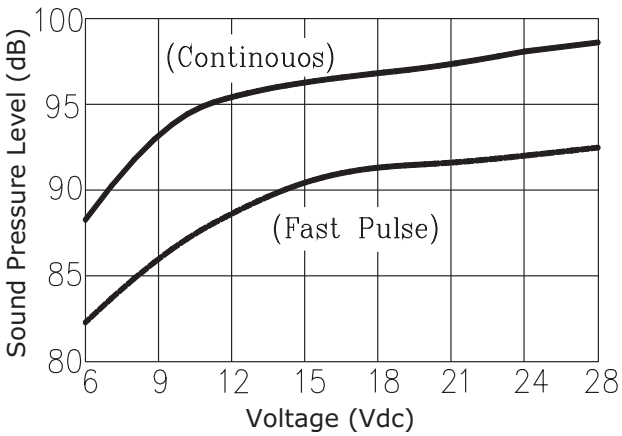

Voltage vs. Current Consumption

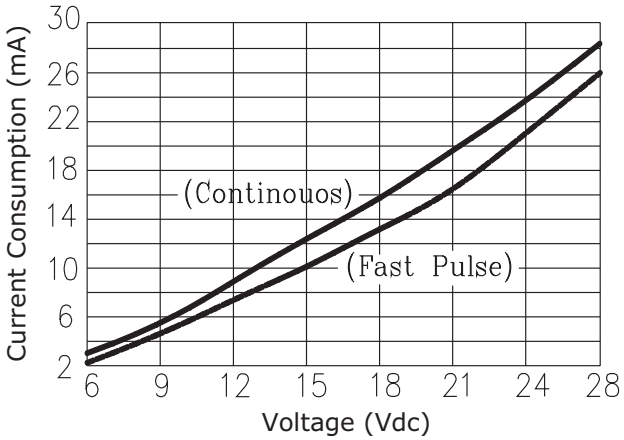

PACKAGING

units: mm

Carton Size: 550 x 330 x 290 mm
Carton QTY: 400 pcs per carton

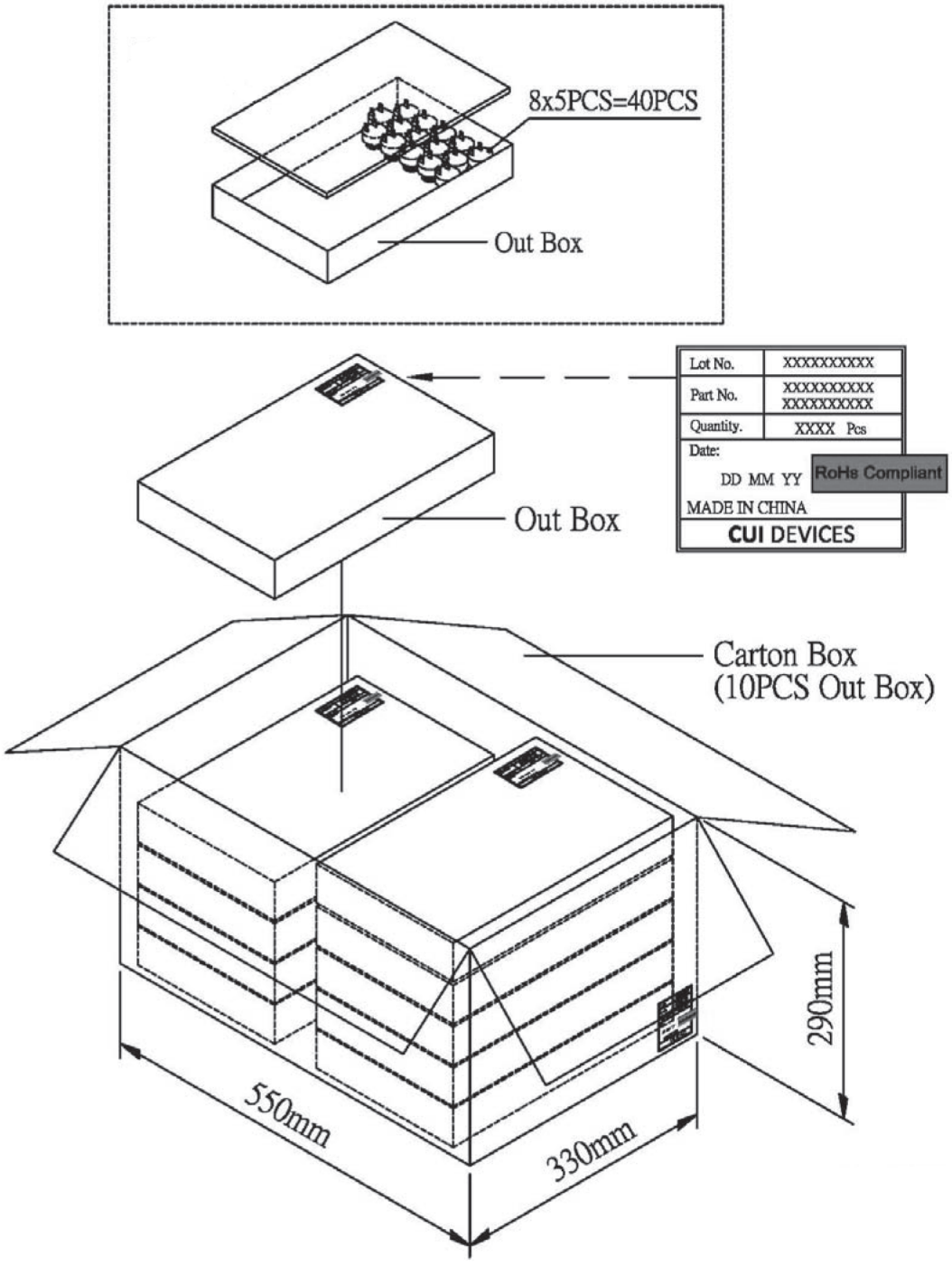

REVISION HISTORY

rev.	description	date
1.0	initial release	12/11/2019
1.01	logo, datasheet style update	08/05/2022

The revision history provided is for informational purposes only and is believed to be accurate.

CUI Devices offers a one (1) year limited warranty. Complete warranty information is listed on our website.

CUI Devices reserves the right to make changes to the product at any time without notice. Information provided by CUI Devices is believed to be accurate and reliable. However, no responsibility is assumed by CUI Devices for its use, nor for any infringements of patents or other rights of third parties which may result from its use.

CUI Devices products are not authorized or warranted for use as critical components in equipment that requires an extremely high level of reliability. A critical component is any component of a life support device or system whose failure to perform can be reasonably expected to cause the failure of the life support device or system, or to affect its safety or effectiveness.

cuidevices.com