CUDEVICES

MODEL: CPI-4333-85L127 | **DESCRIPTION:** PIEZO BUZZER INDICATOR

FEATURES

- 85 dB
- piezo
- internally driven
- panel mount with 127 mm lead wires



RoHS

SPECIFICATIONS

parameter	conditions/description	min	typ	max	units
rated voltage			12		Vdc
operating voltage		4		28	Vdc
current consumption	at rated voltage			20	mA
rated frequency	at rated voltage	2,400	2,900	3,400	Hz
sound pressure level	at 30 cm, rated voltage	85			dB
tone	single fast pulse (3.0 ±20% Hz)				
dimensions	Ø43 x 33				mm
weight			43.0		g
material	ABS				
terminal	wire leads				
operating temperature		-20		60	°C
storage temperature		-30		70	°C
RoHS	yes				

Notes: 1. All specifications measured at 25±3°C, humidity at 60~70%, under 86~106 kPa pressure, unless otherwise noted.

SOLDERABILITY

parameter	conditions/description	min	typ	max	units
hand soldering		370	380	390	°C

MECHANICAL DRAWING

units: mm
tolerance: ±0.5 mm

wire: UL1007 24 AWG

TONE	CONNECTIONS
Single	Red + Black
Fast Pulse	Red + Blue

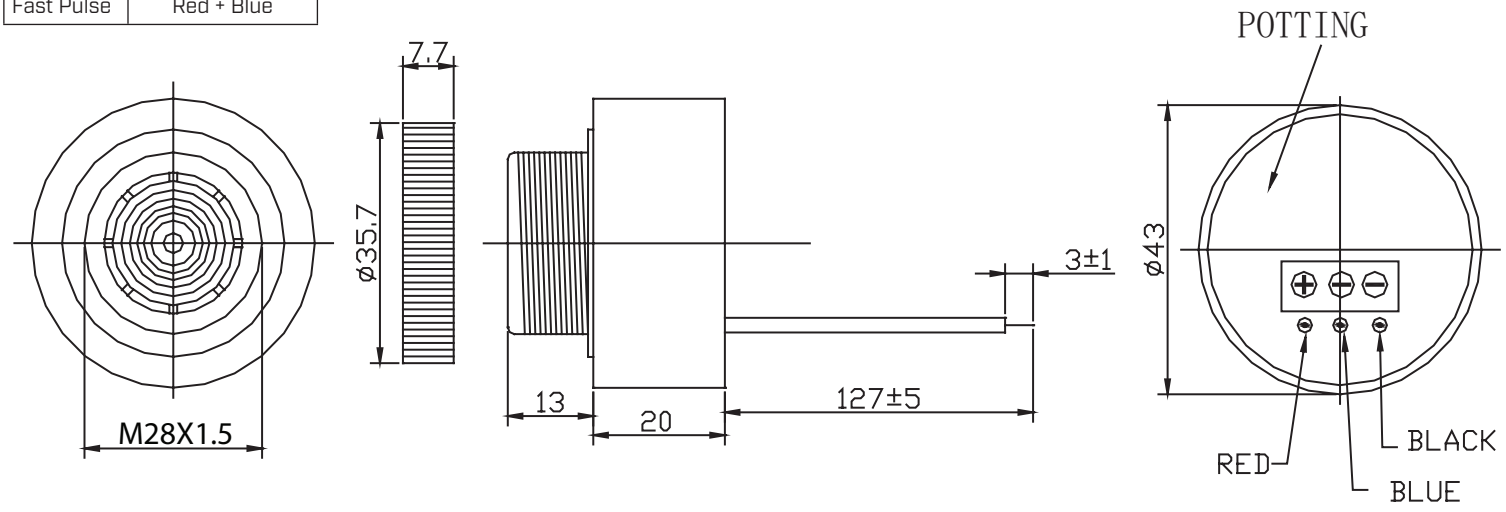

PERFORMANCE CURVES

SPL: Voltage vs. Sound Pressure Level
I: Voltage vs. Current Consumption

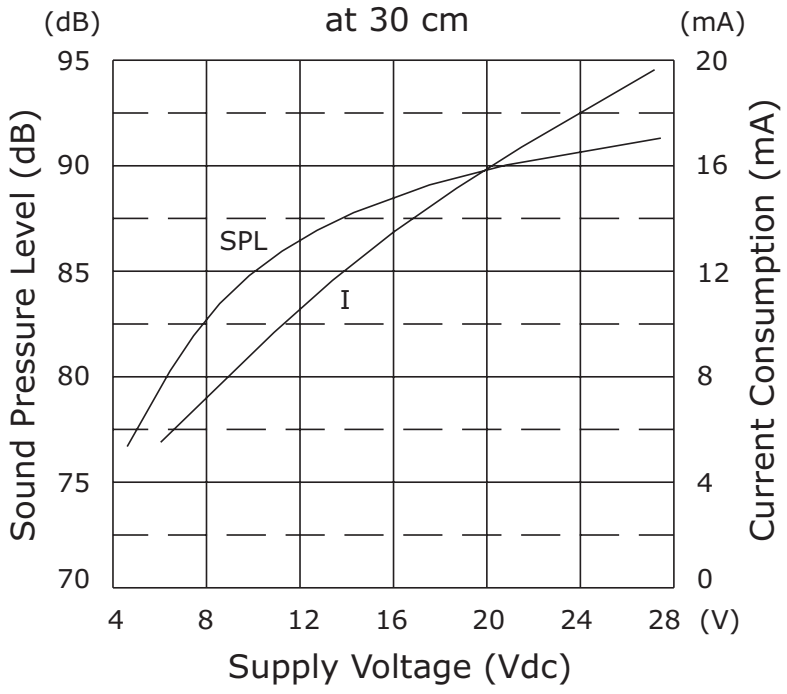

PACKAGING

units: mm

Carton Size: 585 x 315 x 330 mm
Carton QTY: 300 pcs per carton

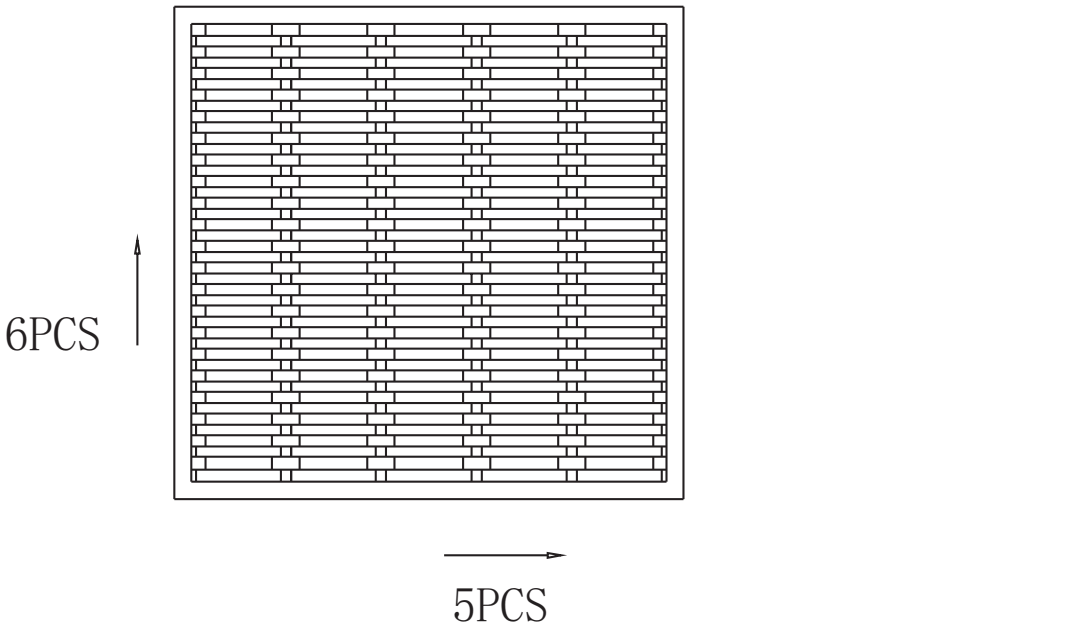

6×5PCS=30PCS/box

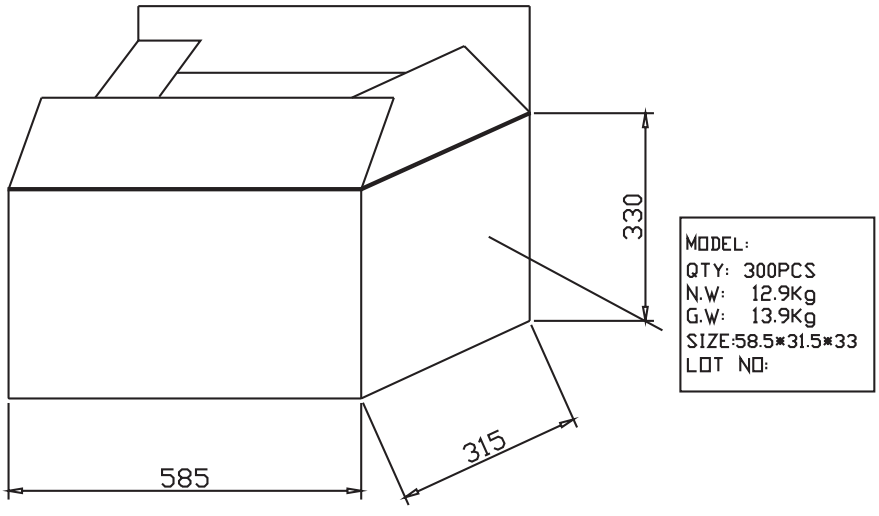

300PCS/CARTON

REVISION HISTORY

rev.	description	date
1.0	initial release	07/18/2019
1.01	brand update	01/02/2020
1.02	logo, datasheet style update	08/05/2022

The revision history provided is for informational purposes only and is believed to be accurate.

CUI Devices offers a one (1) year limited warranty. Complete warranty information is listed on our website.

CUI Devices reserves the right to make changes to the product at any time without notice. Information provided by CUI Devices is believed to be accurate and reliable. However, no responsibility is assumed by CUI Devices for its use, nor for any infringements of patents or other rights of third parties which may result from its use.

CUI Devices products are not authorized or warranted for use as critical components in equipment that requires an extremely high level of reliability. A critical component is any component of a life support device or system whose failure to perform can be reasonably expected to cause the failure of the life support device or system, or to affect its safety or effectiveness.

cuidevices.com